language

# USE AND MAINTENANCE MANUAL

TRANSLATION OF THE ORIGINAL INSTRUCTIONS — ENGLISH

# WELDING GENERATOR

## GM 5-200 HBM
## GM 7-200 HBT

Codice
Code
Code
Codigo
Kodezahl
Código
Код

C1UN70209003

Edizione
Edition
Édition
Edición
Ausgabe
Edição
Издание

10.2020

- Motosaldatrice
- Engine Driven Welder
- Motosoudeuse
- Motosoldadoras
- Schweißaggregat
- Motosoldadora
- По Вышкам

MADE IN ITALY

MOSA Weld

ENGLISH

## 0. GENERAL INFORMATION

M1.1 *INTRODUCTION* ..... PAG. 4
M1.4.2 *CE MARK* ..... PAG. 5
M2 *SYMBOLS AND SAFETY PRECAUTIONS* ..... PAG. 6
M2.1 *WARNINGS* ..... PAG. 7
M2.5... *SAFETY RULES* ..... PAG. 8

## 1. GENERAL INFORMATION OF THE MACHINE

M0 *DESCRIPTION OF THE MACHINE* ..... PAG. 12
*RECORDING DATA* ..... PAG. 13

## 2. TRANSPORT AND HANDLING

M3 *MACHINE UNPACKING* ..... PAG. 14
M4.1 *TRANSPORT AND HANDLING COVERED UNITS* ..... PAG. 15

## 3. INSTALLATION AND USE

M2.7 *INSTALLATION* ..... PAG. 16
M2.6 *INSTALLATION ADVICES* ..... PAG. 17
*ELECTROMAGNETIC COMPATIBILITY* ..... PAG. 18
M25 *SET-UP FOR OPERATION GASOLINE ENGINE* ..... PAG. 19
*EARTHING* ..... PAG. 20
M26 *STARTING AND STOPPING GASOLINE ENGINE* ..... PAG. 21
M31 *CONTROLS* ..... PAG. 22
M34 *USE AS WELDER* ..... PAG. 23
M37... *USE AS GENERATOR* ..... PAG. 24

## 4. INSTRUMENTS USE

M55 *RECOMMENDED ELECTRODES* ..... PAG. 26

## 5. MANUTENZIONE

M40.2... *TROUBLE SHOOTING* ..... PAG. 27
M43 *MAINTENANCE* ..... PAG. 29
*MAINTENANCE SCHEDULED HONDA* ..... PAG. 30
M45 *STORAGE AND DISASSEMBLE* ..... PAG. 31

## 6. INFORMAZIONI TECNICHE

M1.5 *TECHNICAL DATA* ..... PAG. 32
M1.6 *TECHNICAL DATA* ..... PAG. 33
M2.7.1 *DIMENSIONS* ..... PAG. 34

Dear Customer,
We wish to thank you for having bought a high quality set.
Our sections for Technical Service and Spare Parts will work at best to help you if it were necessary.
To this purpose we advise you, for all control and overhaul operations, to turn to the nearest authorized Service Centre, where you will obtain a prompt and specialized intervention.

☞ In case you do not profit on these Services and some arts are replaced, please ask and be sure that are used exclusively original parts; this to guarantee that the performances and the initial safety prescribed by the norms in force are re-established.

☞ *The use of **non original spare parts will cancel immediately** any guarantee and Technical Service obligation.*

**NOTES ABOUT THE MANUAL**
Before actioning the machine please read this manual attentively. Follow the instructions contained in it, in this way you will avoid inconveniences due to negligence, mistakes or incorrect maintenance. The manual is for qualified personnel, who knows the rules: about safety and health, installation and use of sets movable as well as fixed.

You must remember that, in case you have difficulties for use or installation or others, our Technical Service is always at your disposal for explanations or interventions.

The manual for Use Maintenance and Spare Parts is an integrant part of the product. It must be kept with care during all the life of the product.
In case the machine and/or the set should be yielded to another user, this manual must also given to him.
Do not damage it, do not take parts away, do not tear pages and keep it in places protected from dampness and heat.

You must take into account that some figures contained in it want only to identify the described parts and therefore might not correspond to the machine in your possession.

**INFORMATION OF GENERAL TYPE**
In the envelope given together with the machine and/or set you will find: the manual for Use Maintenance and Spare Parts, the manual for use of the engine and the tools (if included in the equipment), the guarantee (in the countries where it is prescribed by law).

The Manufacturer shall not be liable for ANY USE OF THE PRODUCT OTHER THAN THAT PRECISELY SPECIFIED IN THIS MANUAL and is thus not liable for any risks which may occur as a result of IMPROPER USE. The Company does not assume any liability for any damage to persons, animals or property.

Our products are made in conformity with the safety norms in force, for which it is advisable to use all these devices or information so that the use does not bring damage to persons or things.

While working it is advisable to keep to the personal safety norms in force in the countries to which the product is destined (clothing, work tools, etc.).

Do not modify for any motive parts of the machine (fastenings, holes, electric or mechanical devices, others..) if not duly authorized in writing: the responsibility coming from any potential intervention will fall on the executioner as in fact he becomes maker of the machine.

☞ ***NOTICE:** the manufacturer, who keeps the faculty, apart the essential characteristics of the model here described and illustrated, to bring betterments and modifications to parts and accessories, without putting this manual uptodate immediately.*

Any of our product is labelled with CE marking attesting its conformity to appliable directives and also the fulfillment of safety requirements of the product itself; the list of these directives is part of the declaration of conformity included in any machine standard equipment.
Here below the adopted symbol:

CE marking is clearly readable and unerasable and it can be either part of the data-plate.

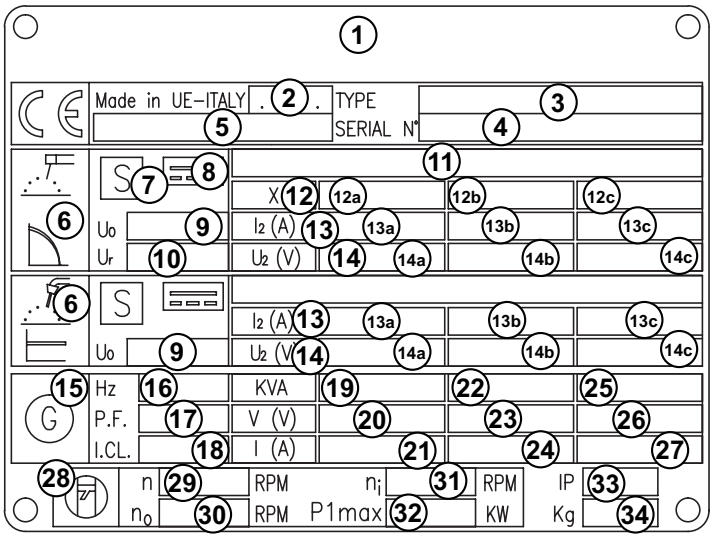


1. Manufacturer name or brand
2. Year of production
3. Engine Driven Welder model
4. Serial number | registration number
5. Reference to the standard confirming that the Engine Driven Welder complies with its requirements
6. Welding process symbol
7. Symbol for Engine Driven Welders which can be used an environment with increased risk of electric shock.
8. Welding current symbol
9. OCV value (Rated no-load voltage) or adjustment range between minimum and maximum value
10. Reduced rated no-load voltage in case of a voltage reducing device (VRD)
11. Maximum and minimum welding current values and relative voltage value
12. Duty cycle symbol
12a. Duty cycle values
12b. Duty cycle values
12c. Duty cycle values
13. Rated welding current symbol
13a. Rated welding current values
13b. Rated welding current values
13c. Rated welding current values
14. Conventional load voltage symbol
14a. Welding voltage values
14b. Welding voltage values
14c. Welding voltage values
15. Auxiliary power supply symbol
16. Rated frequency
17. Power factor Cosφ
18. Insulation class
19. Rated power (kVA/kW)
20. Rated voltage (V)
21. Rated current (A)
22. Rated power (kVA/kW)
23. Rated voltage (V)
24. Rated current (A)
25. Rated power (kVA/kW)
26. Rated voltage (V)
27. Rated current (A)
28. Engine symbol
29. Rated speed
30. Rated no-load speed
31. Rated idle speed
32. Engine maximum power
33. IP degree protection
34. Dry weight (kg)

Furthermore, on each model it is shown the noise level value; the symbol used is the following:

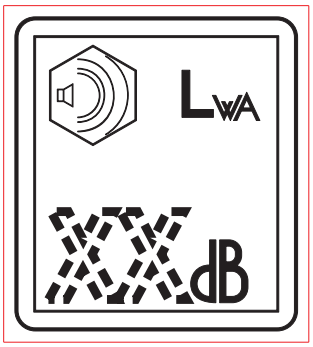


The indication is shown in a clear, readable and indeleble way on a sticker.

ENGLISH

## SYMBOLS IN THIS MANUAL

- The symbols used in this manual are designed to call your attention to important aspects of the operation of the machine as well as potential hazards and dangers for persons and things.
  Moreover, this symbolism intends to draw your attention with the aim to give you indications for a correct use and, as a result, to obtain a good operation of the machine or equipment used.

## SAFETY PRECAUTIONS

**DANGEROUS**

This heading warns of an immediate danger for persons as well for things. Not following the advice can result in serious injury or death.

**WARNING**

This heading warns of situations which could result in injury for persons or damage to things.

**CAUTION**

To this advice can appear a danger for persons as well as for things, for which can appear situations bringing material damage to things.

**IMPORTANT**

**NOTE**

**ATTENTION**

These headings refer to information which will assis you in the correct use of the machine and/or accessories.

## SIMBOLS

***STOP*** **-** Read absolutely and be duly attentive

Read and pay due attention

## DANGER

***GENERAL ADVICE*** **-** If the advice is not respected damage can happen to persons or things.

***HIGH VOLTAGE*** **-** Attention High Voltage.There can be parts in voltage, dangerous to touch. The non observance of the advice implies life danger.

***FIRE*** **-** Danger of flame or fire. If the advice is not respected fires can happen.

***HEAT*** **-** Hot surfaces. If the advice is not respected burns or damage to things can be caused.

***EXPLOSION*** **-** Explosive material or danger of explosion. in general. If the advice is not respected there can be explosions.

***ACIDS*** **-** Danger of corrosion. If the advice is not respected the acids can cause corrosions with damage to persons or things.

***PRESSION*** **-** Danger of burns caused by the expulsion of hot liquids under pressure.

## PROHIBITIONS

It is prohibited to smoke while filling the tank with fuel.

The cigarette can cause fire or explosion. If the advice is not respected fires or explosions can be caused.

It is prohibited to use water to quench fires on the electric machine

If the advice is not respected fires or damage to persons can be caused.

***Use only with non inserted voltage*** **-**

It is prohibited to make interventions before having disinserted the voltage.

***ACCES FORBIDDEN*** *to non authorized* peaple.

## ADVICE

***Use only with safety clothing*** **-**

It is compulsory to use the personal protection means given in equipment.

***WRENCH*** **-** Use of the tools. If the advice is not respected damage can be caused to things and even to persons.

☞ **FIRST AID.** In case the operator shold be sprayed by accident, from corrosive liquids a/o hot toxic gas or whatever event which may cause serious injuries or death, predispose the first aid in accordance with the ruling labour accident standards or of local instructions.

| | |
|---|---|
| Skin contact | Wash with water and soap |
| Eyes contact | Irrigate with plenty of water, if the irritation persists contact a specialist |
| Ingestion | Do not induce vomit as to avoid the intake of vomit into the lungs, send for a doctor |
| Suction of liquids from lungs | If you suppose that vomit has entered the lungs (as in case of spontaneous vomit) take the subject to the hospital with the utmost urgency |
| Inhalation | In case of exposure to high concentration of vapours take immediately to a non polluted zone the person involved |

ENGLISH

☞ **FIRE PREVENTION.** In case the working zone,for whatsoever cause goes on fire with flames liable to cause severe wounds or death, follow the first aid as described by the ruling norms or local ones.

| EXTINCTION MEANS | |
|---|---|
| Appropriated | Carbonate anhydride (or carbon dioxyde) powder, foam, nebulized water |
| Not to be used | Avoid the use of water jets |
| Other indications | Cover eventual shedding not on fire with foam or sand, use water jets to cool off the surfaces close to the fire |
| Particular protection | Wear an autorespiratory mask when heavy smoke is present |
| Useful warnings | Avoid, by appropriate means to have oil sprays over metallic hot surfaces or over electric contacts (switches,plugs,etc.). In case of oil sprinkling from pressure circuits, keep in mind that the inflamability point is very low. |

ENGLISH

## GENERAL SAFETY INSTRUCTIONS

☞ **NOTE:** the information contained in this manual are subject to change without notice.

The instructions in this manual are intended as indicative only. It is the responsibility of the owner/operator to evaluate risks and potential damages in relation to the use of the product in the specific conditions of application. Remember that the non observance of the indications of this manual may result in damage to people or things.
In all cases, however, it is understood that the use shall be in compliance with the applicable laws/regulations.

- Before operating the machine, read carefully the safety instructions contained in this manual and other manuals supplied (engine, alternator, etc.).
- All operations, handling, installation, use, maintenance, repair should be carried out by authorized and qualified personnel.
- When operating, wear personal protective equipment (PPE): footwear, gloves, helmet, etc..
- The owner is responsible for maintaining the equipment in safe conditions.

***Use only in perfect technical conditions***

The machinery or equipment must be used in perfect technical condition. Remove immediately any defects that may affect the safe conditions of use.

- Before starting to use this equipment it is important to take knowledge of all the controls of the machine, all its functions and its correct installation in order to avoid accidents to people and damage to the machine itself. In particular, it is important to know how to stop the equipment quickly in case of emergency.
- Do not allow the use of the machine to people unless previously instructed with all the information for a proper, safe use.
- Forbid the access in the operational area to non authorized personnel, children and pets so as to protect them from possible injury caused by any part of the machine.

## SAFETY PRECAUTIONS DURING HANDLING AND TRANSPORTATION

- Lift the machine using only the points allocated for this function.
  The lifting eye (or eyes) and the correct positioning of the forks of the forklift are marked with specific adhesives.
- Clear the operational area of possible obstacles and all unnecessary personnel.
- Always use lifting equipment properly sized and controlled by enabled bodies.
- It is forbidden to set on the frame of the equipment objects or accessories that alter weight and center of gravity and cause stresses not foreseen to the lifting points.
- Do not submit the machine and the lifting equipment to swinging or shock which may transmit dynamic stress to the structure.

**Equipments with trailers or site tows**

- Never drag the machine without trailer (or site tow)
- Check for a correct assembly of the machine to the towing device.
- Always make sure that the hook of the vehicle is suitable for towing of the total mass of the trailer.
- Do not tow the trailer if the coupling devices are worn or damaged.
- Check for proper tire pressure.
- Do not replace the tires with types different from the original ones.
- Check that the brakes and the optical signaling of the trailer are working properly.
- Verify that the bolts of the wheels are in place and well tightened.
- Do not park the machine (on trailer or site tow) on a steep slope.
  For the stops, not followed by a work session, always engage the parking brake and / or block the wheels by means of wheel chocks.
- Do not tow the trailer on bumpy roads.
- Do not exceed the maximum permissible speed on public roads of 80 km/h with the trailer, in any case comply with the legislation applicable in the country of use.
- Do not use the site tow on public roads, this is intended for use only in private and delimited areas. The maximum permitted speed is 40 km/h on smooth surfaces (asphalt or concrete), adapt in each case the speed to the type of ground.

ENGLISH

ENGLISH

| SAFETY PRECAUTIONS DURING INSTALLATION AND USE | |
|---|---|
| | Do not instal equipments closed to heat source, to explosion or fire risk area. |
| 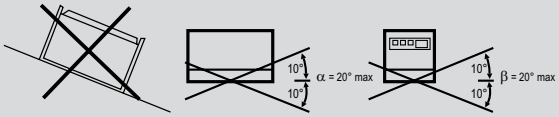  | Always locate the machine on a flat and solid ground, so as to avoid tipping, slipping or falling during operation. Avoid using the machine on slopes greater than 10 degrees. |
| 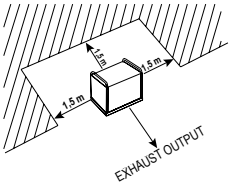  | Make sure the area immediately surrounding the machine is clean and free from debris |
| | Do not place objects or obstructions in the vicinity of the air intakes and air outlets, a possible overheating of the generator could cause a fire. |
| | Connect the machine to an earthing system according to the regulations in force at the place of installation.<br>Use the ground terminal on the front of the machine. |
| 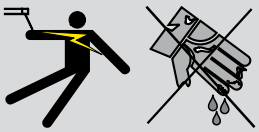 | Do not use the machine with wet or damp hands and / or clothing.<br>Use plugs suitable for the output sockets of the machine and make sure that electrical cords are in good condition. |
| 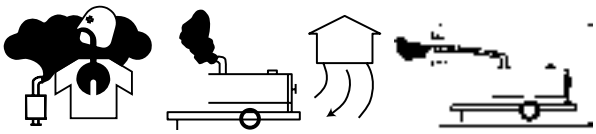 | The machine must always be positioned so that the exhaust gases are dispersed in the air without being inhaled by people or living beings.<br>If you use the machine indoors is necessary that the installation is designed and built by skilled technicians in a workmanlike manner. |
| | During normal operation, keep doors closed. The access to the internal parts should be allowed only for maintenance reasons. |
| | Keep area near to the muffler free from objects such as rags, paper, cardboard. The high temperature of the muffler could cause the burning of objects and cause fire |
| | Immediately stop the machine in case of malfunction.<br>Do not restart the machine without first having found and fixed the problem. |

ENGLISH

| SAFETY PRECAUTIONS DURING MAINTENANCE | |
|---|---|
| Make use of qualified personnel to carry out maintenance and troubleshooting | |
| | It is mandatory to stop the engine before performing any maintenance on the machine. |
| | Always use protective devices and suitable equipment. |
| | Do not touch the engine, the exhaust pipes and the muffler during operation or immediately after. Allow the engine to cool before performing any operation |
| | With the machine running pay attention to moving parts such as fans, belts, pulleys.<br>Do not remove the protections and the safety devices unless absolutely necessary, restore them after completion of the maintenance or repair. |
| | Do not refuel while the engine is running or hot.<br>Do not smoke or use naked flames when refueling. |
| | Refuel only outdoors or in well ventilated areas.<br>Avoid spilling fuel, especially on the engine.<br>Clean and dry any leaks before restarting the machine |
| | Slowly unscrew the cap of the fuel tank and put it back always after refueling.<br>Do not fill the tank completely to allow for expansion of the fuel inside |
| | Do not remove the radiator cap when the engine is running or still hot, the coolant may spurt out and cause serious burns |
| | Do not handle the battery without the use of protective gloves, the battery fluid contains sulfuric acid, which is very corrosive and dangerous |
| | Do not smoke, avoid any naked flames or sparks near the battery, the vapors exhaled could cause the battery to explode |

ENGLISH

| ADDITIONAL REQUIREMENTS FOR ENGINE DRIVEN WELDERS | |
|---|---|
| | Do not touch parts with OCV, it can cause mortal shock or heavy born.<br>OCV is active at welding stick and auxiliary side when welding generating set is working. |
| 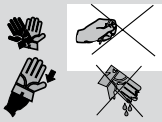 | Do not manage electric devices and welding stick whit feet, hands or wet dresses. |
| | Protect yourself from electric shock by insulating yourself from work and ground.<br>Use non-flammable, dry insulating material if possible, or use dry rubber amts, dry wood or plywood, or other dry insulating material. |
| 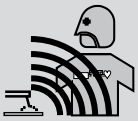 | Magnetic fields can affect pace-makers. Pace-maker wearers keep away from arc welding and cutting operations and equipment.<br>Wearers should consult their doctor before going near arc welding, gouging, arc cutting, or spot welding operations. |
| | Breathing welding fumes can be hazardous to your health. Keep your out of the fumes |
| | Use enought ventilation, exhaust at the arc, or both, to keep fumes and gases from your breathing zone and the general area.<br>If adequancy of ventilation or exhaust is uncertain, have the air quality checked. |
| 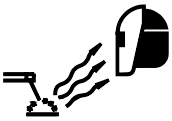 | Arc rays can burn eyes and skin.<br>Use welding helmet with correct shade of filter. |
| | While working protect your eyes using glasses with lateral screen and your head with dedicated cap; in case of restricted working area or unsafe working position also protect your ears. |
| | Wear complete body protection. Wear oil free protective clothing such as leather gloves, heavy shirt, cuffless pants, and hight boots. |
| | Welding can cause fire or explosion.<br>Have a fire extinguisher nearby, and have a trained fire watcher ready to use it. |
| | Do not weld near flammable material. Move flammanles at least (10 m) away or protect them with flame-proof covers. |
| | Do not weld containers, structures, etc. with fammable materials inside (tank, cylinder, etc.); in case you need to weld, verify such items by qualified person in order to fully safely operate. |
| | Hot parts can cause severe burns.<br>Don't touch the welder with bare hand. If handling is needed, use proper tools and/or wear heavy, insulated welding gloves to prevent burns.<br>Allow cooling period before handing parts or working on gun or torch. |

ENGLISH

ENGLISH

The GM 5-200 HBM / GM 7-200 HBTengine driven welder is a unit which ensures the function as:
a) a current source for arc welding
b) a current source for the auxiliary generation

Unit meant for industrial and professional use, powered by an endothermic engine; it is composed of various main parts such as: engine, alternator, electric and electronic controls, the fairing or a protective structure.
The assembling is made on a steel structure, on which are provided elastic support which must damp the vibrations and also eliminate sounds which would produce noise.

ENGLISH

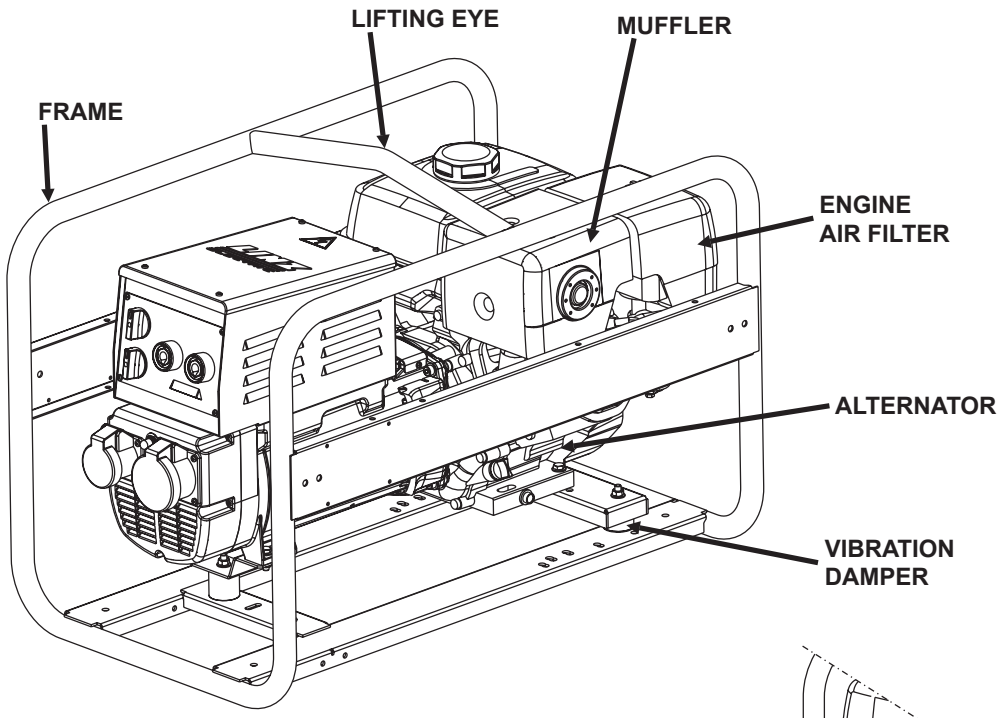


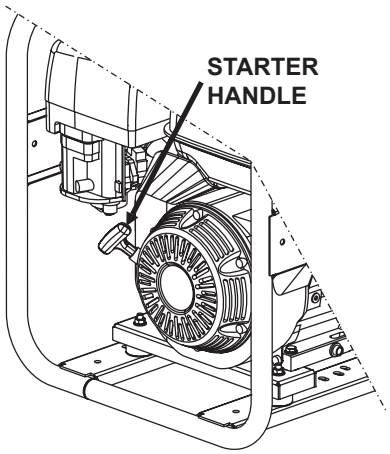


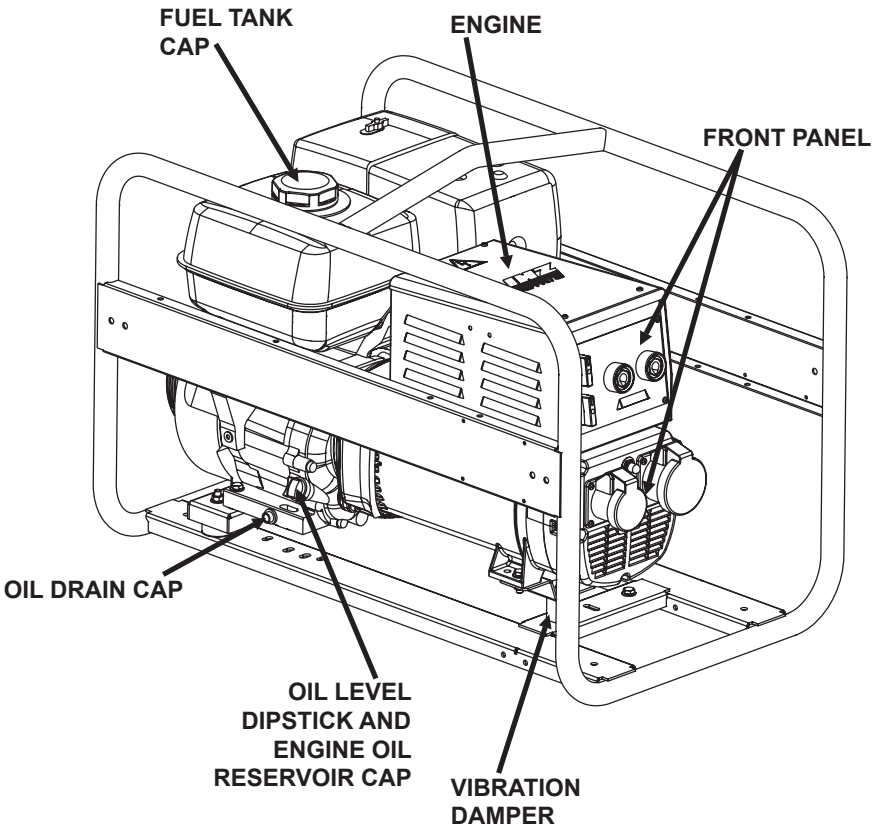

ENGLISH

The manual is for the range of machines indicated on the front cover.
With the scope to facilitate the search of the spare parts and maintain information of the bought machine, is necessary to record some data.

**Please write the requested data inside the squares to side:**

1. Model of machine
2. Serial number of the machine
3. Serial number of the engine
4. Name of the dealer where bought the machine
5. Address of the dealer
6. Phone number of the dealer
7. Date of the bought machine
8. Notes

ENGLISH

## RECORDING DATA

**1.**

**2.**

**3.**

**4.**

**5.**

**6.**

**7.**

**8.**

ENGLISH

## NOTE

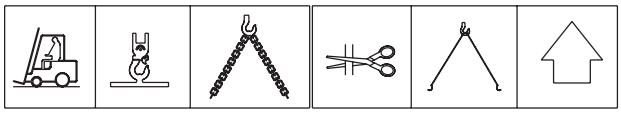

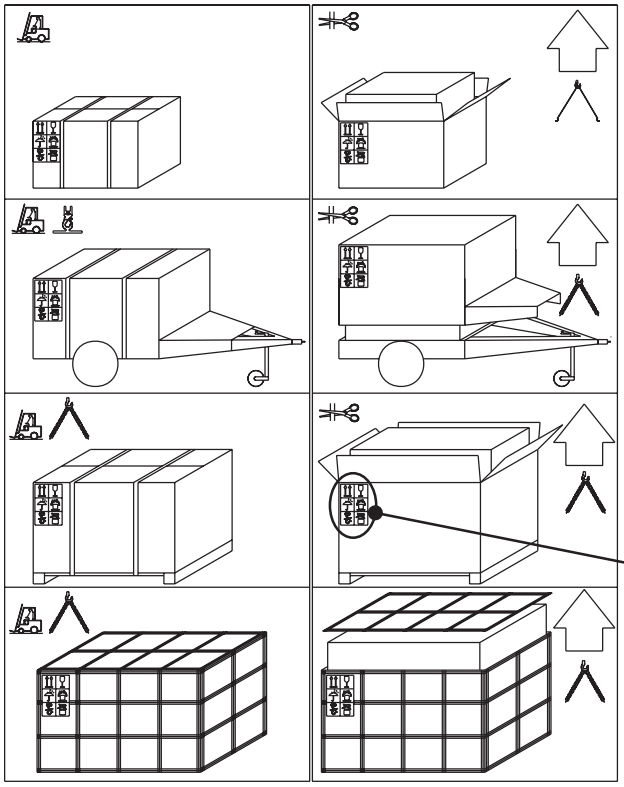

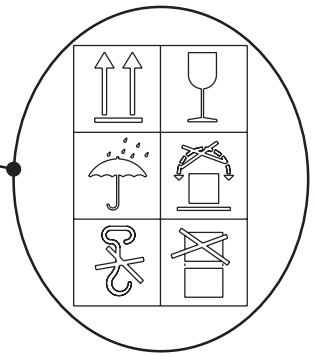

☞ Be sure that the lifting devices are: correctly mounted, adequate for the weight of the machine with it's packaging, and conforms to local rules and regulations.
When receiving the goods make sure that the product has not suffered damage during the transport, that there has not been rough handling or taking away of parts contained inside the packing or in the set.
In case you find damages, rough handling or absence of parts (envelopes, manuals, etc.), we advise you to inform immediately our Technical Service.

For eliminating the packing materials, the User must keep to the norms in force in his country.

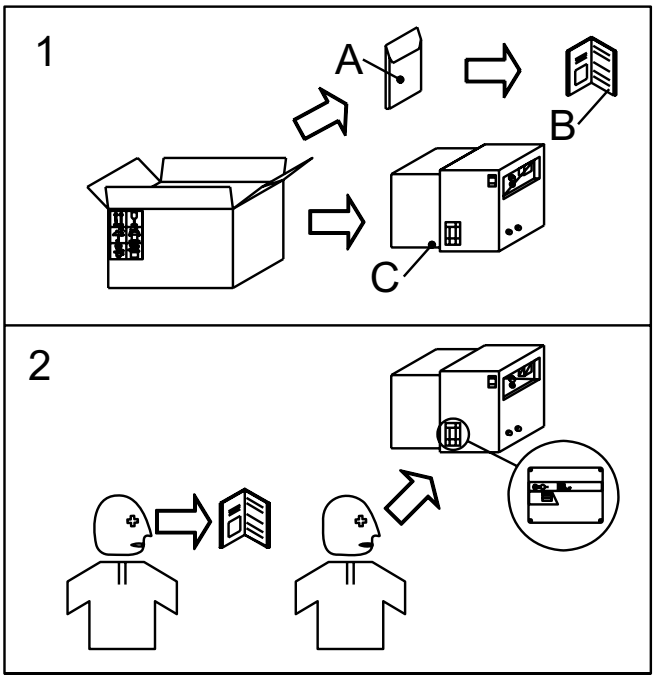


1) Take the machine (C) out of the shipment packing. Takeout of the envelope (A) the user's manual (B).
2) Read: the user's manual (B), the plates fixed on the machine, the data plate.

ENGLISH

# ATTENTION

Transportation must always take place with the engine off, electrical cables and starting battery disconnected and fuel tank empty. Be sure that the lifting devices are: correctly mounted, adequate for the weight of the machine with it's packaging, and conform to local rules and regulations.
Only authorized persons involved in the transport of the machine should be in the area of movement.

**DO NOT LOAD OTHER PARTS WHICH CAN MODIFY WEIGHT AND BARICENTER POSITION.**
**IT IS STRICTLY FORBIDDEN TO DRAG THE MACHINE MANUALLY OR TOW IT BY ANY VEHICLE (model with no CTM accessory).**

If you did not keep to the instructions, you could damage the structure of the machine.

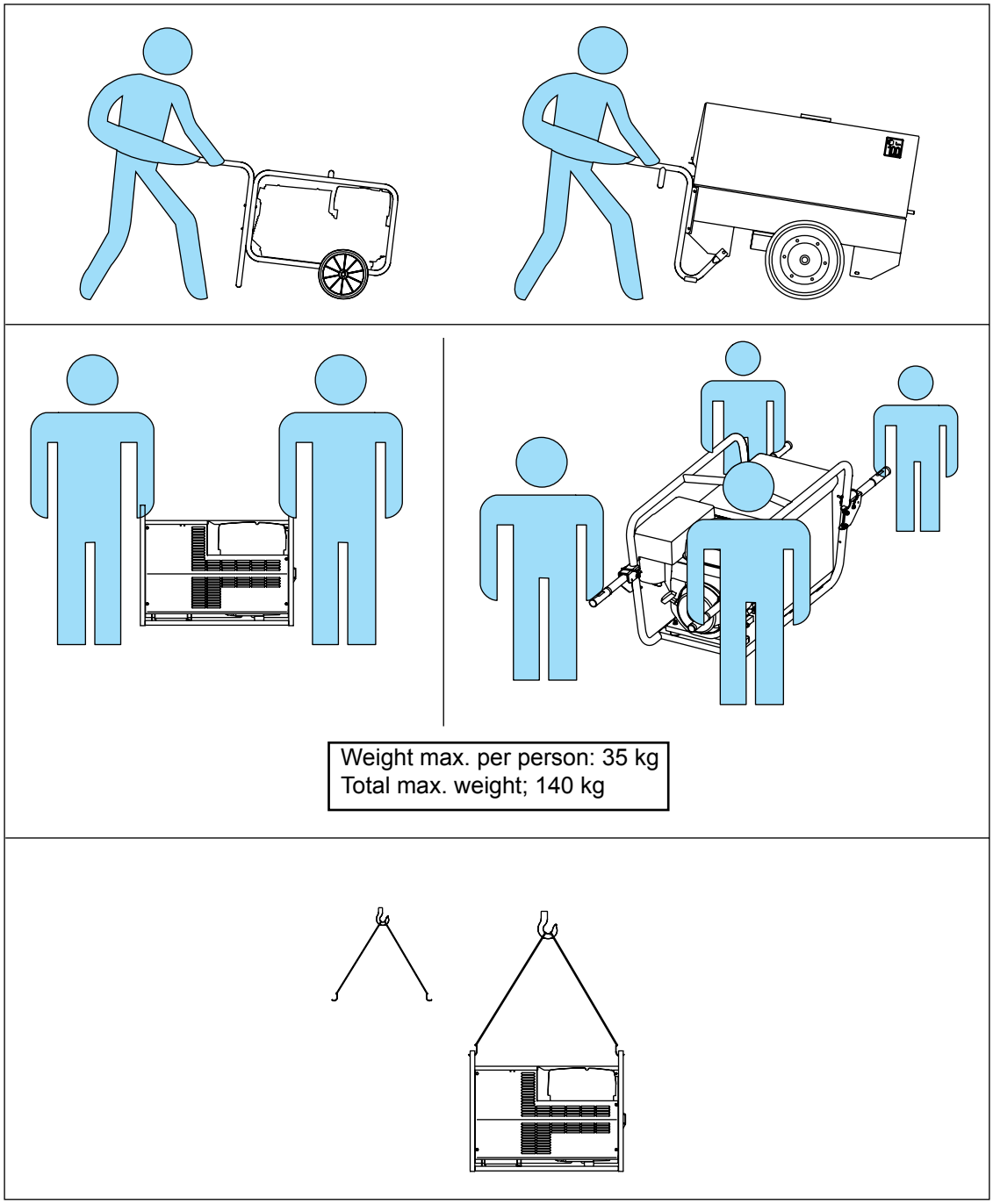

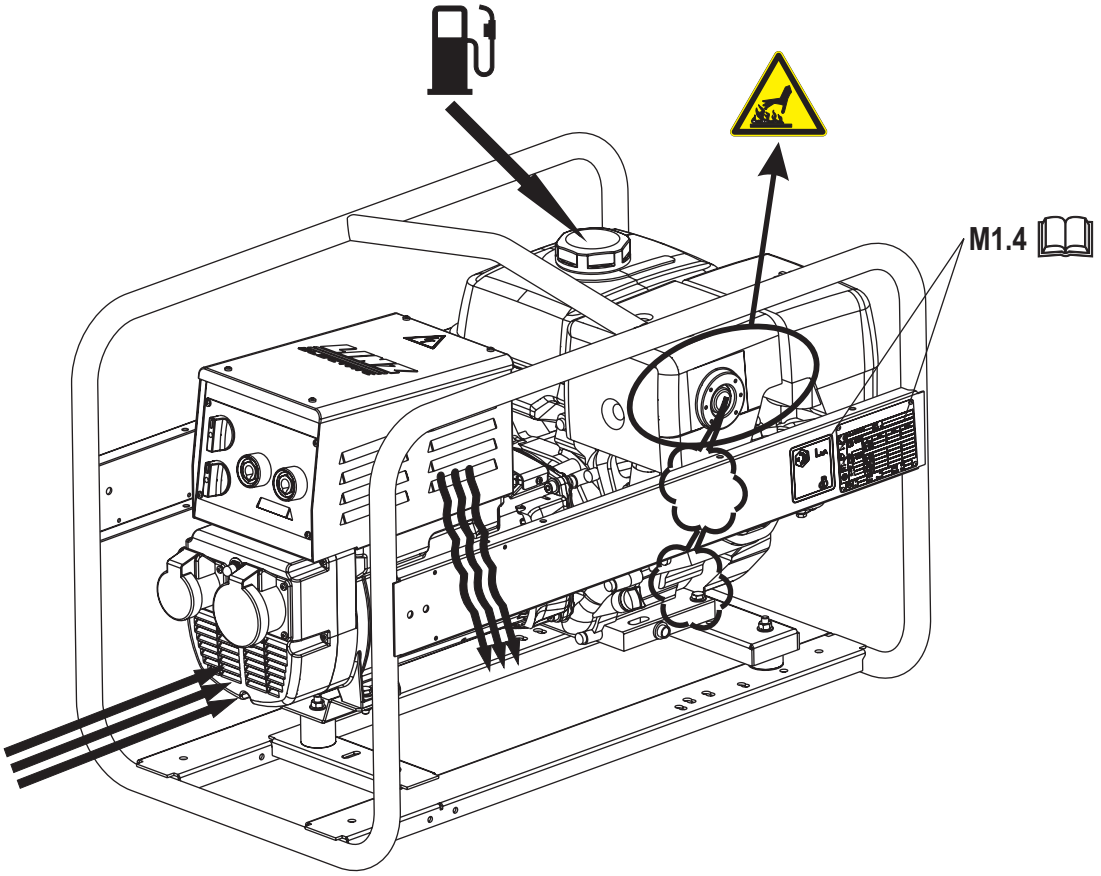
M1.4

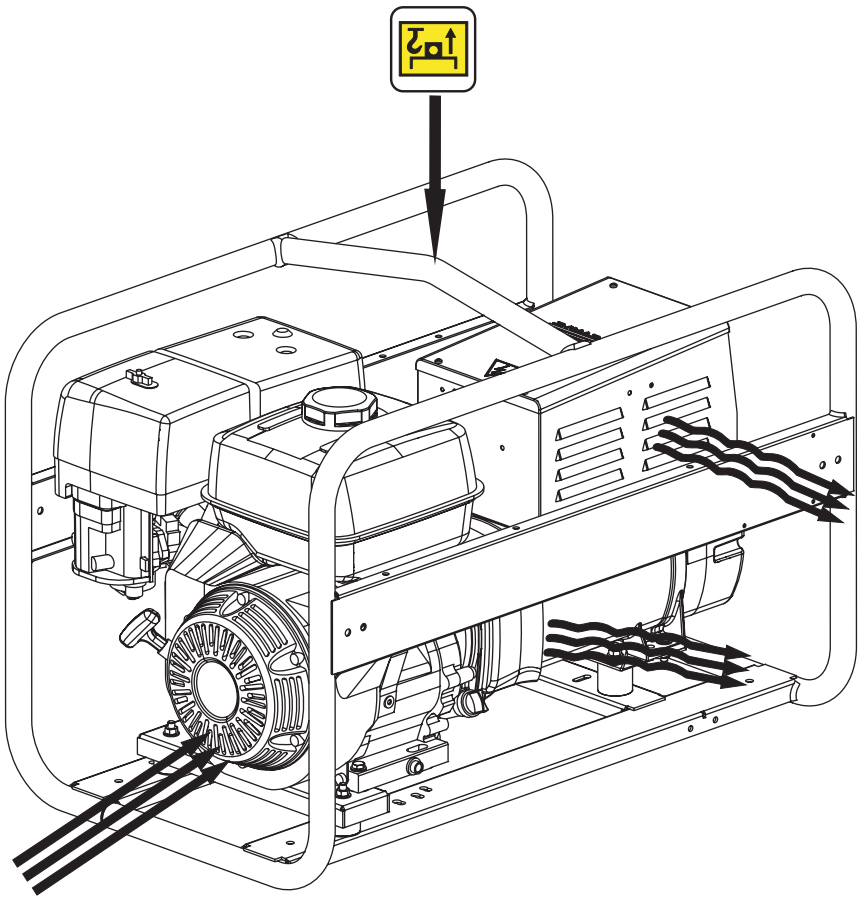

ENGLISH

## INSTALLATION AND ADVICE BEFORE USE

The operator of the welder is responsible for the security of the people who work with the welder and for those in the vicinity.

Before installing the welder machine, read the safety instruction of this manual at the chapter 2.5.

Particulary remember:
- installing operation must be made by authorized and qualified person.
- while installing operation use individual safety devices (shoes, gloves, cap, etc.)

**DANGER**

The machine must be positioned so that exhaust gas is diffused without being inhaled by any living being.
Engine exhaust gas contains carbon monoxide, which is harmful to one's health, and in big quantities can cause intoxication and death.
Local norms in force have to be respected.

**ATTENTION**

A safe distance has to be kept between the machine and fuel deposits, inflammable goods (cloths, paper, etc.), chemicals, according to indications provided by the authority in charge. In order to avoid potentially dangerous situations, area surrounding genset should be isolated so that unauthorized people will not be able to get close to the unit. Even if The machines are manufactured according to electromagnetic compatibility norms, we suggest NOT to install the genset near machinery that can be influenced by magnetic fields.

**ATTENTION**

This equipment is designed for outdoor use. It may be stored, but is not intended to be used when welding outside during precipitation unless sheltered

## INSTALLATION

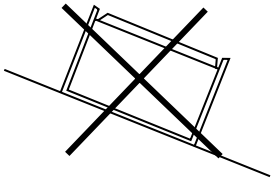

Always instal the welder machine on a hard and plan surface in order to avoid rollovers, slips or falls while working;
avoid to use the welder machine with slope more than 10°.

## FIXING

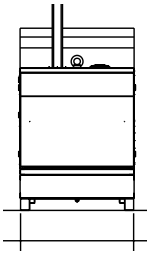

In order to absorb vibrations produced by genset, it should be fixed to a surface with sufficient rigidity, isolated against vibrations towards other structures and with a mass equal to at least three times the genset mass.
If such above could not be possible, be sure that the welding machine do not move or slip while working due to vibrations;
be care to fix the welder machine with dedicated tools.

## MOVING THE WELDER MACHINE

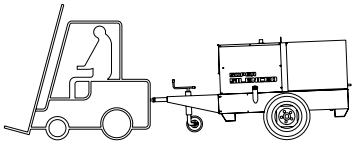

If is needed to move the welder machine be sure that the engine is off, that no electric connection is on and that noone cable will avoid to move the welder machine.

## INSTALLATION ON VEHICLE

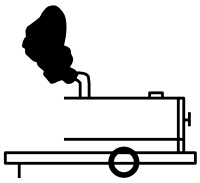

The wrong loads distribution can cause the instability of the vehicle and abnormalities to wheel and components. In case of transport need, use dedicated vehicle for this purpose. The loads must be balanced, fixed in order to guaranty the stability of the vehicle. Do not exceed the max load suitable of the vehicle with reference to axle, wheels, etc. Fix the base of welder machine at the frame or platform observing the instruction of the vehicle producer

This equipment is built in compliance with standard IEC-EN60974-10.
The equipment should be installed and used in accordance with the information below to achieve electromagnetic compatibility. The limits required by IEC-EN60974-10 may not be adequate to completely eliminate interference when the affected equipment is in close proximity or has a high degree of sensitivity. In such cases it may be necessary to use other measures to further reduce interference

**WARNING**

this Class A equipment is not intended for use in residential locations where the electrical power is provided by the public low-voltage supply system. There may be potential difficulties in ensuring electromagnetic compatibility in those locations, due to conducted as well as radiated disturbances.

**INSTALLATION AND USE**
The user is responsible for installing and using the arc welding equipment according to the manufacturer's instructions.
If electromagnetic disturbances are detected, then it shall be the responsibility of the user resolve the situation with the technical assistance of the manufacturer.
In some cases this remedial action may be as simple as earthing the welding circuit (see note). In other cases, it could involve constructing an electromagnetic screen enclosing the welding power source and the work complete with associated filters
In all cases electromagnetic disturbances shall be reduced to the point where they are no longer troublesome.

**NOTE** : The welding circuit may or may not be earthed for safety reasons. Changing the earthing arrangements should only be authorized by a person who is competent to assess whether the changes will increase the risk of injury, for example, by allowing parallel welding current return paths, which may damage the earth circuits of other equipment.
Further guidance is given in IEC/TS 620812.

**ASSESSMENT OF AREA**
Before installing arc welding equipment the user shall make an assessment of potential electromagnetic problems in the surrounding area. The following shall be taken into account:

A) other supply cables, control cables, signalling and telephone cables, above, below and adjacent to the arc welding equipment;
B) radio and television transmitters and receivers;
C) computer and other control equipment;
D) safety critical equipment, for example guarding of industrial equipment;
E) the health of the people around, for example the use of pacemakers and hearing aids;
F) equipment used for calibration or measurement;
G) the immunity of other equipment in the environment. The user shall ensure that other equipment being used in the environment is compatible. This may require additional protection measures;
H) the time of day that welding or other activities are to be carried out.

The size of the surrounding area to be considered will depend on the structure of the building and other activities that are taking place. The surrounding area may extend beyond the boundaries of the premises.

**METHODS OF REDUCING EMISSIONS**

**MAINTENANCE OF THE ARC WELDING EQUIPMENT**
The arc welding equipment should be routinely maintained according to the manufacturer's recommendations. All access and service doors and covers should be closed and properly fastened when the arc welding equipment is in operation. The arc welding equipment should not be modified in any way, except for those changes and adjustments covered in the manufacturer's instructions.

**WELDING CABLES**
The welding cables should be kept as short as possible and should be positioned close together, running at or close to the floor level.

**EQUIPOTENTIAL BONDING**
Bonding of all metallic objects in the surrounding area should be considered. However, metallic objects bonded to the work piece will increase the risk that the operator could receive an electric shock by touching these metallic objects and the electrode at the same time. The operator should be insulated from all such bonded metallic objects.

**EARTHING OF THE WORKPIECE**
Where the workpiece is not bonded to earth for electrical safety, nor connected to earth because of its size and position, for example, ship's hull or building steelwork, a connection bonding the workpiece to earth may reduce emissions in some, but not all instances. Care should be taken to prevent the earthing of the workpiece increasing the risk of injury to users or damage to other electrical equipment.
Where necessary, the connection of the workpiece to earth should be made by a direct connection to the workpiece, but in some countries where direct connection is not permitted, the bonding should be achieved by suitable capacitance, selected according to national regulations.

**SCREENING AND SHIELDING**
Selective screening and shielding of other cables and equipment in the surrounding area may alleviate problems of interference. Screening of the entire welding area may be considered for special applications.

ENGLISH

### BATTERY WITHOUT MAINTENANCE (WHEN ASSEBLED)

The supplied battery is generally ready for use.
Connect the cable + (positive) to the pole + (positive) of the battery (after having taken away the protection), by properly tightening the clamp.
On some models, the battery must be activated.
To activate it (fill the included acid) please follow the instructions shown on the manual attached to the battery.
When battery is activated, **DON'T** add any other liquid.

### LUBRICANT

Please refer to the motor operating manual for the recommended viscosity.

**To check the oil level:**

1. Remove the oil-fill tap (24) and clean the dipstick (23).
2. Insert the dip-stick into the oil filler without screwing it in.
3. If the oil level is low, fill with recommended oil up to the top of the oil filler

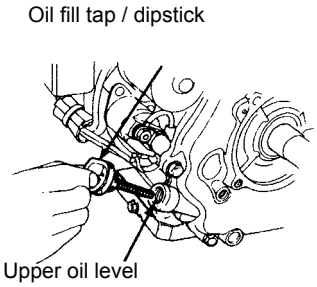


**ATTENTION**

It is dangerous to fill the motor with too much oil, as its combustion can provoke a sudden increase in rotation speed.

☞ ***NOTE:*** *before starting and switching off, see instructions in the engine owner's manual he-rewith attached.*

**MOTORS WITH OIL ALERT DEVICE**

The "Oil Alert" system is designed to prevent damage to the motor due to an insufficient quantity of oil in the cup. This system automatically shuts off the motor before the oil level falls below the safety limit.
If the motor does not start up again after shutting itself off, check the oil level.

### FUEL

**ATTENTION**

Gasoline is highly flammable. Refuel with motor shut off in a flat surfaced well-ventilated area. Do not refuel in the presence of flames. Avoid spilling fuel.
Any eventual spilled fuel and fumes are flammable. Clean any dispersions of fuel before starting up the motor.

Fill the tank with gasoline for automobiles (preferably lead free or with low lead content in order to reduce deposits in the combustion chamber to a minimum).
For further details on the type of gasoline to use, see the motor operating manual supplied.

Check that the dry air filter is correctly installed and that there are no leaks around the filter which could lead to infiltrations of non-filtered air to the inside of the motor.

### DRY AIR FILTER

Verificare che il filtro aria a secco sia correttamente installato e che non vi siano perdite intorno allo stesso che potrebbero provocare infiltrazioni di aria non filtrata all'interno del motore.

ENGLISH

## EARTHING WITHOUT GROUND FAULT INTERRUPTER

The protection against electric shock from contact indirect is ensured by the "electrical separation" with equipotential bonding between all the exposed conductive parts of the generating set.

The generating set is **NOT** equipped with a earth leakage circuit breaker because its windings are not connected to ground, hence the machine should **NOT** be intentionally connected to a grounding circuit.

The limitation of the extension of the electric circuit is very important for safety, do not power supply to electric plants with a length greater than 200 meters.
It is important that the power cords of the equipment are equipped with the protective conductor, yellow-green cable, in order to ensure the connection between the exposed conductive parts of the generating set and the equipment; this provision does not apply to the class II equipment (double insulation or reinforced insulation) recognizable by the symbol ⧈ .
The cables must be suitable environment in which it operates. It should be noted that with temperatures below 5°C PVC cables become stiff and PVC insulation tends to cut to the first fold.

The protection by electrical separation is **NOT** suitable if the machine is destined to supply power complex plants or located in special environments with greater risk of electric shock.

In these cases it is necessary to adopt security measures electricity provided by law.

For EXAMPLE, you can install a GFI (Ground Fault Interrupter or Earth Leakage Circuit Breaker) high sensitivity 30mA, and grounding the Neutral of the generating set: this operation must be performed by a qualified electrician or at a authorized service provider.
The grounding of the generating set is now mandatory to ensure protection against indirect contact by means of the GFI.

Connect the generating set to an earthing system via a cable certain efficiency using the ground terminal (12) on the machine.

## EARTHING WITH GROUND FAULT INTERRUPTER

The grounding connection to an earthed installation **is obligatory** for all models equipped with a differential switch (circuit breaker). In these groups the generator star point is generally connected to the machine's earthing; by employing the TN or TT distribution system, the differential switch guarantees protection against indirect contacts.

In the case of powering complex installations requiring or employing additional electrical protection devices, the coordination between the protection devices must be verified.

For the grounding connection, use the terminal (12); comply to local and/or current regulations in force for electrical installations and safety

## EARTHING WITH ISOMETER

Machines equipped with insulation resistance monitor allow intentionally not to connect the ground terminal PE (12) to an earthing system.
Located on the front of the machine the insulation resistance monitor has the function of continuously monitoring the ground insulation of live parts.
If the insulation resistance falls below the pre-set fault value, the insulation resistance monitor will interrupt the supply of the connected equipment.
It is important that the power cords of the devices are provided with the green-yellow circuit protective conductor, so as to ensure the bonding among all the grounds of the equipment and the ground of the machine; the latter provision does not apply to equipment with double insulation or reinforced insulation.

**NOTE:** it is possible to connect the PE terminal (12) to an own ground connection. In this case an IT earthing system is accomplished, this means with the active parts isolated from earth and the equipment cases grounded.
In this case, the insulation resistance monitor checks the insulation resistance of the active parts both towards case and ground, for example, the insulation towards ground of the power cables.

Check daily

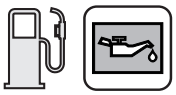

**NOTE**

Do not alter the primary conditions of regulation and do not touch the sealed parts.

## STARTING

**1.** Turn the fuel cock to ON

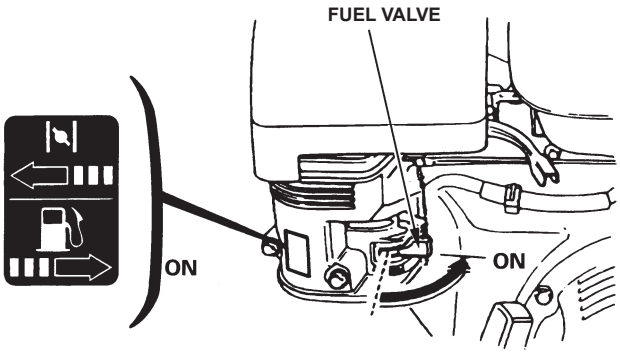


**2.** Switch the choke control to CLOSE

**N.B.**: Do not use the air valve if the motor is hot or the air temperature is too high.

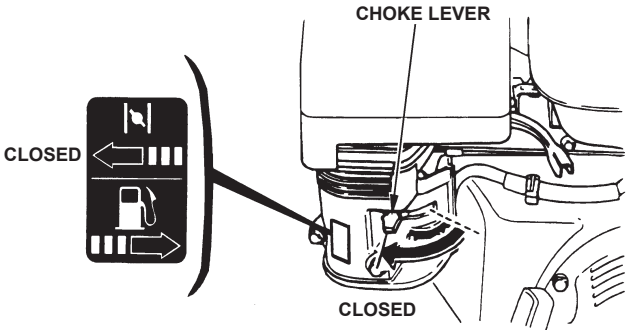


**3.** Turn the engine switch to the ON position

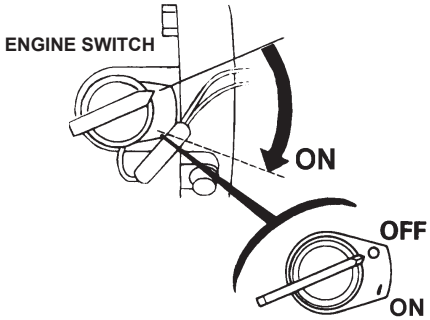


**4.** Lightly pull the start-up knob until meeting resistance, then pull decisively

☞ **ATTENTION:**

Allow the start-up knob to re-enter slowly, avoiding having it knock against the motor and thereby damaging the start-up system.

**5.** Once the engine is started, with the starter off, let it turn for a few minutes before drawing the load.

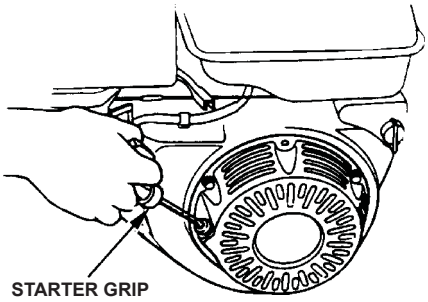


## STOPPING

To stop the engine in an emergency, simply turn the engine switch to the OFF position.

**Under normal conditions, use the following procedure:**

1) shut off any loads which are connected to the unit auxiliary outputs;
   - disconnect the electric protection device (D).

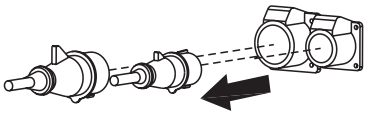

2) stop welding.

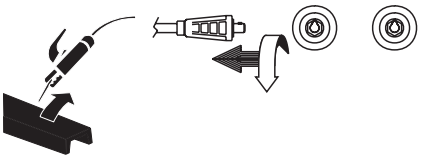

3) Wait for a few minutes to allow the machine to cool off, take however into consideration the prescriptions given in the engine use manual.
4) Turn the engine switch to the OFF position.
5) Shut the gasoline cock.

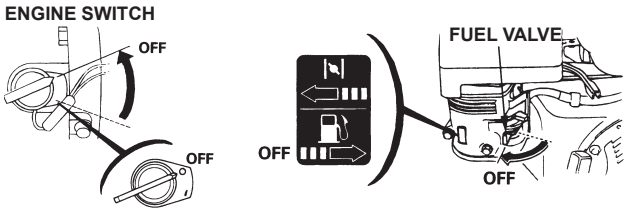


**CAUTION**

*RUNNING-IN*

During the first 50 hours of operation, do not use more than 60% of the maximum output power of the unit and check the oil level frequently, in any case please stick to the rules given in the engine use manual.

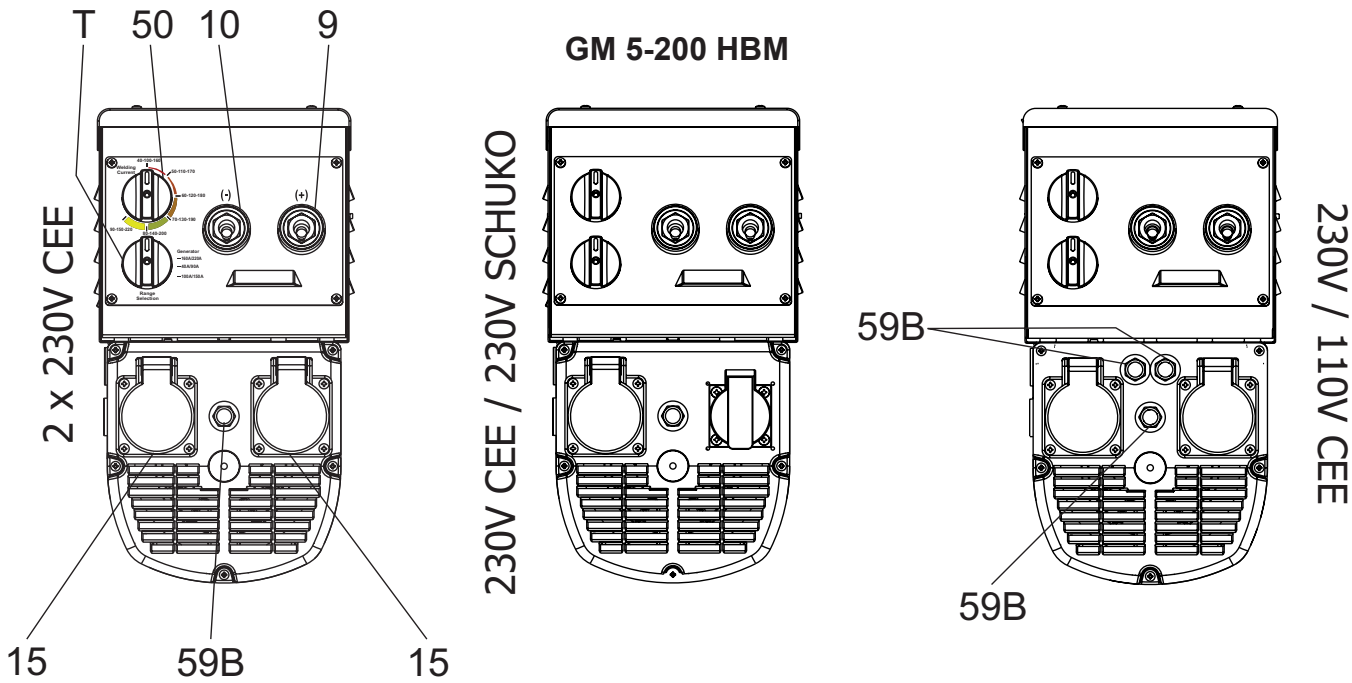


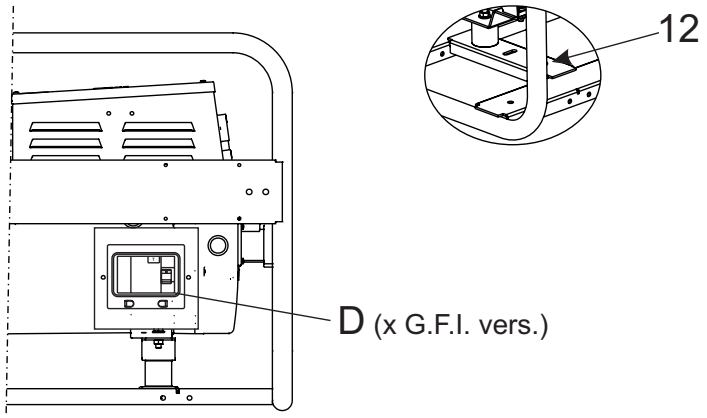


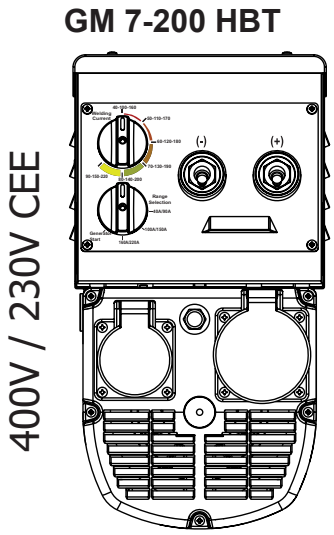


| Pos. | Description | Function |
|---|---|---|
| 9 | c.c. welding sockets (+) | Connection sockets for welding cables |
| 10 | c.c. welding sockets (-) | Connection sockets for welding cables |
| T | Welding current regulator | Allows the regulation of the welding output current |
| 50 | Function/Current switch | Select the maximum welding current and the working mode as generator of auxiliary power |
| 15 | A.C. socket | AUX sockets for load connection. |
| D | Ground Fault Interrupter (30 mA) | Device for protection against not-direct contacts for TN and TT systems (neutral grounded to frame) |
| 59B | AUX thermal circuit breaker | Overcurrent protection of the equipments connected to the single-phase sockets |
| 12 | Earth terminal | Ground connection point for gen-set. |

ENGLISH

This symbol (Norm EN 60974-1 security standards for arc welders ) signifies that the welder can be used in areas with increased risk of electrical shock.

Assure the right ground connection (12) (when and if needed). For this purpose see chapter “GROUND CONNECTION”.

**WARNING**

It is prohibited for any unauthorized persons to access areas adjacent to the engine driven welder or the welding process.

**WARNING**

The sockets, after the machine is started, also with no cables, are anyway under voltage.

**WARNING**

To reduce the risk of electromagnetic interferences, use the minimum length of welding cables and keep them near and down (ex. on the floor).

The welding operations must take place far from any sensitive electronic device. Make sure that the unit is earthed (see M20 and/or M25). In case the interference should last, adapt further disposition, such as: move the unit, use screened cables, line filters, screen the entire work area.

In case the above mentioned operations are non sufficient, please contact our Technical Assistance Service.

**CAUTION**

With a welding cable length up to 10 m is suggested a section of 35 mm²; wìth longer cables a bigger section is required.

### CONNECT WELDING CABLES

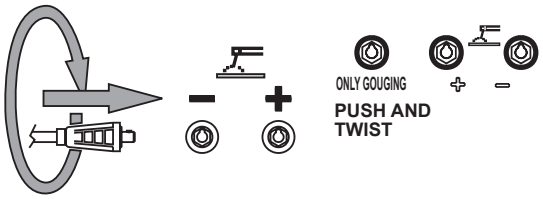


Fully insert the welding cable plugs into the corresponding sockets turnning them clockwise to lock them in position. Make sure that the ground clamp ,whose cable must be connected to the + or - terminal, depending on the type of electrode, makes a good connection and is near to the welding position. Pay attention to the two polarities of the welding circuit, which must not come in electric contact between themselves.
Carefully tighten the output cables to the bushings; if loose, they can cause problems of overheating and damage the bushings, cables, etc.

### STARTING OF THE SET

During every start, selector must be on position **“GENERATOR”** to guarantee the alternator self-energising.

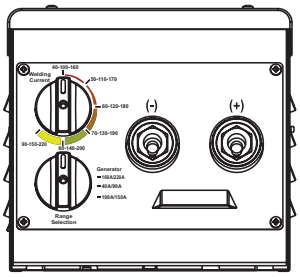


### WELDING CURRENT SETTING

In this function the selector must indicate the current range indicated on the packing of electrodes that will be welded.
At last, using main welding current selector it is possible to set the most suitable current to weld the used electrode.
Important: every time the machine is used as welder it is necessary to disconnect the load from the sockets of the alternator to
avoid any damage that can be caused by voltage fluctuations while the machine is welding.

### WORKING AS GENERATOR

In this function selector must be on position **“GENERATOR”** to allow to use of the sockets mounted on the rear panel.

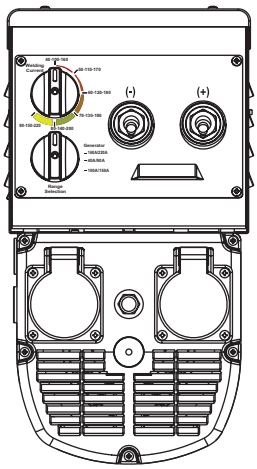

ENGLISH

**WARNING**

It is absolutely forbidden to connect the unit to the public mains and/or another electrical power source .

**Access forbidden to area adjacent to electricity-generating group for all non-authorized personnel.**

**WARNING**

For the canopy generator sets provided with doors, the following instruction shall be observed. During the normal operation, the doors of the engine compartment and/or the electrical box shall be kept closed, locked up if possible, as they must be considered in all respects as protection barriers. The access to the internal parts shall occur for maintenance purposes only, by qualified personnel and, in any case, when the engine is stopped.

The electricity-generating groups are to be considered electrical energy producing stations. The dangers of electrical energy must be considered together with those related to the presence of chemical substances (fuels, oils, etc.), rotating parts and waste products (fumes, discharge gases, heat, etc.).

**GENERATION IN AC (ALTERNATING CURRENT)**

Before each work session check the efficiency of the ground connection for the electricity-generating group if the distribution system adopted requires it, such as, for example, the TT and TN systems.
Check that the electrical specifications for the units to be powered - voltage, power, frequency - are compatible with those of the generator. Values that are too high or too low for voltage and frequency can damage electrical equipment irreparably.
In some cases, for the powering of three-phase loads, it is necessary to ensure that the cyclic direction of the phases corresponds to the installation's requirements.
Connect the electric devices to be powered to the AC sockets, using suitable plugs and cables in prime condition.
Before starting up the group, make certain no dangerous situations exist on the installation to be powered.
Check that the thermal-magnetic switch (Z2) is in the OFF position (input lever in downward position).
Start up the electricity-generating group, positioning the thermal-magnetic switch (Z2) and differential switch (D) to ON (input lever in upward position).
Before powering on the utilities, check that the voltmeter (N) and frequency meter (E2) indicate nominal values; in addition, check on the voltmeter change-over switch (H2) (where it is assembled) that the three line voltages are the same.
In the absence of a load, the values for voltage and frequency can be greater than their nominal values. See sections on VOLTAGE and FREQUENCY.

**OPERATING CONDITIONS**

**POWER**

The electrical power expressed in kVA on an electricity-generating group is the available output power to the reference environmental conditions and nominal values for: voltage, frequency, power factors (cos φ).
During the use of the electricity-generating group NEVER EXCEED the power indications, paying careful attention when several loads are powered simultaneously.

**VOLTAGE**

In some types of generators (asynchronous) the no-load voltage can be even higher than 10% with respect to its nominal value; for example, for nominal voltage, three-phase 400Vac or single-phase 230Vac, the no-load voltage can be between 425-440V (three-phase) and 240-252V (single-phase).
The full load voltage could also be 10% lower than its nominal value with balanced loads and with a rotation speed variation of less than 4%.

**FREQUENCY**

The frequency is a parameter that is directly dependent on the motor's rotation speed. Depending on the type of alternator, 2 or 4 pole, we will have a frequency of 50/60 Hz with a rotation speed of 3000/3600 or 1500/1800 revolutions per minute.
The frequency, and therefore the number of motor revolutions, is maintained constant by the motor's speed regulation system. Generally, this regulator is of a mechanical type and presents a droop from no-load to nominal load which is less than 5 % (static or droop), while under static conditions precision is maintained within ±1%.Therefore, for generators at 50Hz the no-load frequency can be 52–52.5 Hz, while for generators at 60Hz the no-load frequency can be 62.5-63Hz.
In some motors or for special requirements the speed regulator is electronic; in these cases, precision under static operating conditions attains ±0.25%, and the frequency is maintained constant in operation from no-load to load (isochronal operation).

**POWER FACTOR - COS φ**

The power factor is a value which depends on the load's electrical specifications; it indicates the ratio between the Active Power (kW) and Apparent Power (kVA). The apparent power is the total power necessary for the load, achieved from the sum of the active power supplied by the motor (after the alternator has transformed the mechanical power into electrical power), and the Reactive Power (kVAR) supplied by the alternator. The nominal value for the power factor is cos φ = 0,8; for different values comprised between 0.8 and 1 it is important during usage not to exceed the declared active power (kW), so as to not overload the electricity-generating group motor; the apparent power (kVA) will diminish proportionally to the increase of cos φ. For cos φ values of less than 0.8 the alternator must be downgraded, since at equal apparent power the alternator should supply a greater reactive power. For reduction coefficients, contact the Technical Service Department.

**STARTING ELECTRIC MOTORS**

The starting of electric motors by a generator can be critical due to the high starting currents that the electric motor requires (Iavv. = Up to 8-10 times the rated current In.).
With asynchronous alternators, the motor starting current must not exceed the rated current of the alternator, which is why asynchronous alternators are not recommended for starting electric motors.

## ELECTRIC PROTECTIONS

### THERMAL-MAGNETIC SWITCH

☞ **NOTE**: for some types of alternators (asynchronous alternators) it is not necessary to protect the three-phase output against short circuits and overcurrents, as the asynchronous alternator self-protects itself.

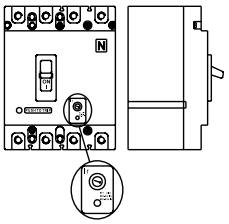

The electricity-generating group is protected against short-circuits and against overloads by a thermal-magnetic switch (Z2) situated upstream from the installation. Operating currents, both thermic and magnetic, can be fixed or adjustable in relation to the switch model.

☞ In models with adjustable operating current **do not modify** the settings, since doing so can compromise the installation's protection or the electricity-generating group's output characteristics. For eventual variations, contact our Technical Service Department.

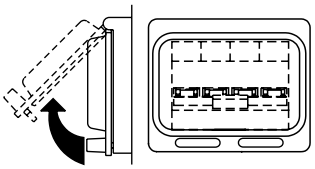

The intervention of the protection feature against overloads is not instantaneous, but follows a current overload/time outline; the greater the overload the less the intervention. Furthermore, keep in mind that the nominal operating current refers to an operating temperature of 30°C, so that each variation of 10°C roughly corresponds to a variation of 5% on the value of nominal current.

In case of an intervention on the part of the thermal magnetic protection device, check that the total absorption does not exceed the electricity-generating group's nominal current.

### DIFFERENTIAL SWITCH

The differential switch or differential relay guarantee protection against indirect contacts due to malfunction currents towards the ground. When the device detects a malfunction current that is higher than the nominal current or the set current, it intervenes by cutting off power to the circuit connected.
In the case of an intervention by the differential switch, check that there are no sheathing defects in the installation: connection cables, sockets and plugs, utilities connected.

☞ Before each work session, check the operation of the differential protection device by pressing the test key. The

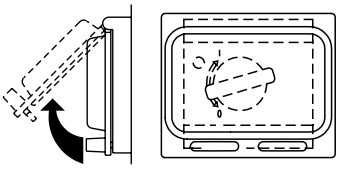

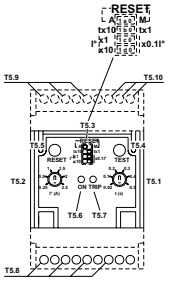


electricity-generating group must be in operation, and the lever on the differential switch must be in the ON position.

### THERMIC PROTECTION

Generally present to protect against overloads on an individual power socket c.a.
When the nominal operating current has been exceeded, the protection device intervenes by cutting off power to the socket.
The intervention of the protection device against overloads is not instantaneous, but follows a current overload/time outline; the greater the overload the less the intervention.
In case of an intervention, check that the current absorbed by the load does not exceed the protection's nominal operating current.
Allow the protection to cool off for a few minutes before resetting by pressing the central pole.

**ATTENTION**

Do not keep the central pole on the thermic protection forcefully pressed to prevent its intervention.

### SIMULTANEOUS USE

The welder's alternator permits the simultaneous use of auxiliary power and welding current. The auxiliary power available to the AC plugs (15) diminishes as the welding current drawn increases.
The table on page M52 TECHNICAL SPECIFICATIONS shows the amount of auxiliary power available as the welding current varies.

### COMBINED USE

The output available from the various auxiliary power sockets is limited, not only by the declared output of the unit but also by the capacity of each individual socket.

ENGLISH

The information here below are to be intended only as indicative since the above norm is much larger.
For further details please see the specific norms and/or the manufacturers of the product to be used in the welding process.

**RUTILE ELECTRODES: E 6013**
Easily removable fluid slag, suitable foe welding in all position.
Rutile electrodes weld in d.c. with both polarities (electrode holder at + or -) and in a.c..
Suitable for soft steels R-38/45 kg/mm$^2$ . Also for soft steels of lower quality.

**BASIC ELECTRODES: E 7015**
Basic electrrodes wels onlu in d.c. with inverse polarity (+ on the electrode holder) ; there are also types for a.c.
Suitable for impure carbon steels. Weld in all position.

**HIGH YIELD BASIC ELECTRODES: E 7018**
The iron contained in the coating increases the quality of metal added. Good mechanical properties. Weld in all position. Electrode holder at + (inverse polarity). Wld deposit of nice aspect, also vertical. Workable; high yield.
Suitable for steels with high contens of sulphur (impurities).

**CELLULOSIC ELECTRODES: E 6010**
Cellulosic electrodes weld only in d.c. with polarity + electrode holder - ground clamp.
Special for steels run on pipes with R max 55 kg/mm$^2$. Weld in all position. volatile slag.

**ELECTRODES IDENTIFICATION ACCORDING TO A.W.S. STANDARDS**

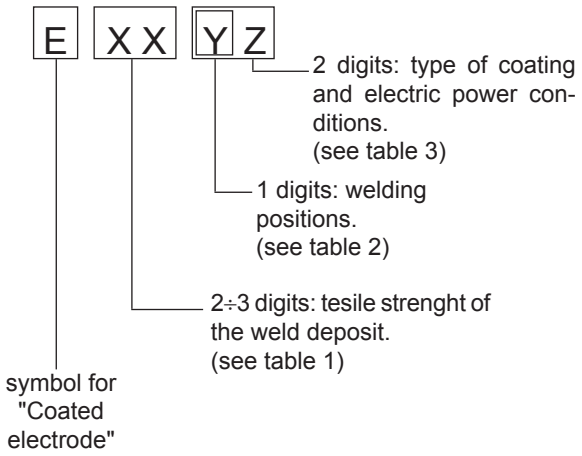


| Number | Strenght | |
|---|---|---|
| | K.s.I. | Kg/mm$^2$ |
| 60 | 60.000 | 42 |
| 70 | 70.000 | 49 |
| 80 | 80.000 | 56 |
| 90 | 90.000 | 63 |
| 100 | 100.000 | 70 |
| 110 | 110.000 | 77 |
| 120 | 120.000 | 84 |

Table 1

| | |
|---|---|
| 1 | for all positions |
| 2 | for plane and verticl |
| 3 | for plane posotion only |

Table 2

| N° | Description |
|---|---|
| 10 | Cellulose electrodes for d.c. |
| 11 | Cellulose electrodes for a.c. |
| 12 | Rutile electrode for d.c. |
| 13 | Rutile electrode for a.c. |
| 14 | High yield rutile electrodes |
| 15 | Basic electrodes for d.c. |
| 16 | Basic electrodes for c.a. |
| 18 | High yield basic electrodes for d.c. (inverse polarity) |
| 20 | Acid electrodes for flat or front position welding for d.c. (- pole) and for a.c. |
| 24 | High yield rutile electrodes for flat or front plane position welding for d.c. and a.c. |
| 27 | High yield acid electrodes for flat or front plane position welding for d.c. (- pole) and a.c.. |
| 28 | High yield basic electrodes for flat or front plane position welding for d.c. (inverse polarity) |
| 30 | Extra high yield acid electrodes, extra high penetration if required, for flat position welding only for d.c. (- pole) and a.c. |

Table 3

ENGLISH

## WARNING

- Have **qualified** personnel do maintenance and troubleshooting work.
- Stop the engine before doing any work inside the machine. If for any reason the machine must be operated while working inside, pay attention moving parts, hot parts (exhaust manifold and muffler, etc.) electrical parts which may be unprotected when the machine is open.
- Remove guards only when necessary to perform maintenance, and replace them when the maintenance requiring their removal is complete.
- Please wear the appropriate clothing and make use of the PPE (Personal Protective Equipment), according to the type of intervention (protective gloves, insulated gloves, glasses).
- Do not modify the components if not authorized. - See pag. M1.1 -

| *Problem* | *Possible cause* | *Solution* |
|---|---|---|
| **PETROL ENGINE** | | |
| The motor does not start up, or starts up and then stops immediately. | 1) Key / engine switch in the wrong positions<br>2) Lack of or insufficient oil in the motor<br>3) Faulty motor stopping device (oil-alert)<br>4) Lack of fuel in tank or fuel tap closed<br>5) Fuel filter clogged<br>6) Bad gasoline. Gasoline oxidizes and deteriorates over time, causing hard starting<br>7) Dirty or faulty spark plug<br>8) Battery not activated, low or faulty<br>9) Battery cable terminals loose or corroded<br>10) Cold motor<br>11) Fuse burnt out<br>12) Other causes | 1) Verify start-up procedure<br>2) Refill or top off<br>3) Replace<br>4) Refill the tank. Open the fuel tap<br>5) Clean or replace<br>6) Drain fuel tank and carburetor. Refuel with fresh gasoline.<br>7) Clean or check and eventually replace<br>8) Activate, recharge, or replace the battery<br>9) Tighten and clean. Replace if corroded<br>10) Hold the command CHOKE, after starting, for a time longer<br>11) Replace fuse<br>12) Consult the motor Operating Manual. |
| The motor does not accelerate. Inconstant speed. Too little power provided by motor. | 1) Air or fuel filter clogged<br>2) Bad gasoline<br>3) Overload | 1) Check the air filter<br>2) Drain fuel tank and carburetor. Refuel with fresh gasoline<br>3) Check the connected loads and if necessary reduce |
| Other problems or inconveniences on the engine. | Consult the motor Operating Manual | |
| **DIESEL ENGINE** | | |
| The motor does not start up, or starts up and then stops immediately. | 1) Lack of fuel in tank or fuel tap closed<br>2) Fuel filter clogged<br>3) Air leaks in fuel system<br>4) Battery not activated, low or faulty<br>5) Battery cable terminals loose or corroded<br>6) Faulty motor stopping device<br>7) Other causes | 1) Refill the tank. Open the fuel tap<br>2) Replace<br>3) Check the feeding circuit<br>4) Activate, recharge, or replace the battery<br>5) Tighten and clean. Replace if corroded<br>6) Replace<br>7) Consult the motor Operating Manual. |
| The motor does not accelerate. Inconstant speed. Too little power provided by motor. | 1) Air or fuel filter clogged<br>2) Overload | 1) Clean or replace filter element(s) Consult the engine Operating Manual.<br>2) Check total load and eventually decrease |
| Other problems or inconveniences on the engine. | Consult the engine Operating Manual. | |

| Problem | Possible cause | Solution |
|---|---|---|
| Alternator do not delfenergise | 1) Insufficient residual voltage<br>2) Connection break<br>3) Three-phase diode bridge is broken<br>4) Insufficient speed<br>5) Windings breakdown<br>6) Poor contact of the brushes | 1) Excite the rotor using a battery<br>2) Reset the connection<br>3) Replace three-phase diode bridge<br>4) Adjust speed regulator of the drive motor<br>5) Check winding resistances and replace damaged part<br>6) Clean and check the slipring |
| Low no-load voltage | 1) Low revolving speed<br>2) Poor contact of the brushes<br>3) Windings breakdown<br>4) Three-phase diode bridge is broken | 1) Adjust speed regulator of the drive motor<br>2) Clean and check or replace the slipring<br>3) Check winding resistances and replace damaged part<br>4) Replace three-phase diode bridge |
| No current available when used as welder but the machine works properly as alternator | 1) Intervention of thermal protection<br>2) Rectification circuit is broken<br>3) Reactance/compound is broken<br>4) Welding rectifier is broken<br>5) Breakdown of the welding winding | 1) Wait the automatic cooldown of the motor<br>2) Check and replace the rectification circuit<br>3) Check and replace the reactance/compound<br>4) Replace the welding rectifier<br>5) Check the resistance and replace the broken part |
| Unstable current as welder but the machine works properly as alternator | 1) Current or polarity is not correct for the type of electrode<br>2) Welding rectifier is broken | 1) Check current setting and polarity of the electrode<br>2) Check and replace the welding rectifier |
| Unstable voltage | 1) Rotating mass too small<br>2) Uneven speed<br>3) Poor contact on collector | 1) Increase the flywheel of the drivemotor<br>2) Check and repair speed regulator of the drive motor<br>3) Check and clean the slipring and brushes |
| Noisy Sound | 1) Defective mechanical coupling<br>2) Short circuit in one of the windings or on the load<br>3) The bearing is broken | 1) Check and modify the alignment<br>2) Check windings and load<br>3) Replace the broken bearing |

## WARNING

**MOVING PARTS can injure**

- Have **qualified** personnel do maintenance and troubleshooting work.
- Stop the engine before doing any work inside the machine. If for any reason the machine must be operated while working inside, **pay attention** moving parts, hot parts (exhaust manifold and muffler, etc.) electrical parts which may be unprotected when the machine is open.
- Remove guards only when necessary to perform maintenance, and replace them when the maintenance requiring their removal is complete.
- Please wear the appropriate clothing and make use of the PPE (Personal Protective Equipment), according to the type of intervention (protective gloves, insulated gloves, glasses).
- Do not modify the components if not authorized.

- See pag. M1.1 -

**HOT surface can hurt you**

### NOTE

By maintenance at care of the utilizer we intend all the operatios concerning the verification of mechanical parts, electrical parts and of the fluids subject to use or consumption during the normal operation of the machine.

For what concerns the fluids we must consider as maintenance even the periodical change and or the refills eventually necessary.

Maintenance operations also include machine cleaning operations when carried out on a periodic basis outside of the normal work cycle.

The repairs **cannot be considered** among the maintenance activities, i.e. the replacement of parts subject to occasional damages and the replacement of electric and mechanic components consumed in normal use, by the Assistance Authorized Center as well as by manufacturer.

The replacement of tires (for machines equipped with trolleys) must be considered as repair since it is not delivered as standard equipment any lifting system.

The periodic maintenance should be performed according to the schedule shown in the engine manual. An optional hour counter (M) is available to simplify the determination of the working hours.

## IMPORTANT

In the maintenance operations avoid that polluting substances, liquids, exhausted oils, etc. bring damage to people or things or can cause negative effects to surroindings, health or safety respecting completely the laws and/or dispositions in force in the place.

### ENGINE AND ALTERNATOR

**PLEASE REFER TO THE SPECIFIC MANUALS PROVIDED.**

Every engine and alternator manufacturer has maintenance intervals and specific checks for each model: it is necessary to consult the specific engine or alternator USER AND MAINTENANCE manual.

### VENTILATION

Make certain there are no obstructions (rags, leaves or other) in the air inlet and outlet openings on the machine, alternator and motor.

### ELECTRICAL PANELS

Check condition of cables and connections daily.
Clean periodically using a vacuum cleaner, **DO NOT USE COMPRESSED AIR.**

### DECALS AND LABELS

*All warning and decals should be checked once a year and **replaced** if missing or unreadable.*

### STRENUOUS OPERATING CONDITIONS

Under extreme operating conditions (frequent stops and starts, dusty environment, cold weather,extended periods of no load operation, fuel with over 0.5% sulphur content) do maintenance more frequently.

### BATTERY WITHOUT MAINTENANCE DO NOT OPEN THE BATTERY

The battery is charged automatically from the battery charger circuit suppplied with the engine.

Check the state of the battery from the colour of the warning light which is in the upper part.

- Green colour: battery OK
- Black colour: battery to be recharged
- White colour: battery to be replaced

## NOTE

THE ENGINE PROTECTION NOT WORK WHEN THE OIL IS OF LOW QUALITY BECAUSE NOT CHARGED REGULARLY AT INTERVALS AS PRESCRIBED IN THE OWNER'S ENGINE MANUAL.

ENGLISH

## IMPORTANT

The engine and alternator manufacturers indicate specific maintenance and control intervals: it is obligatory to consult the books, OPERATION AND MAINTENANCE of the engine and alternator provided with the generator you are using.
If such documents are not supplied with the generator set, ask for a copy to the customer service.

**The information given in the table is only indicative. Specific instructions are given in the operation manuals.**

| MAINTENANCE SCHEDULE | Each Use | First Month or 20 Hrs | Every 3 Months or 50 Hrs | Every 6 Months or 100 Hrs | Every Year or 300 Hrs |
|---|---|---|---|---|---|
| Check level engine oil | ● | | | | |
| Change engine oil | | ● | | ● | |
| Check level reduction case oil (applicable types) | ● | | | | |
| Change reduction case oil (applicable types) | | ● | | ● | |
| Change air cleaner | ● | | | | |
| Clean air cleaner | | | ● | ●* | |
| Replace air cleaner | | | | | ●** |
| Clean sediment cup | | | | ● | |
| Check-adjust spark plug | | | | ● | |
| Replace spark plug | | | | | ● |
| Clean spark arrester (applicable types) | | | | ● | |
| Check-adjust idle speed | | | | | ● |
| Check-adjust valve clearance | | | | | ● |
| Clean combustion chamber | After every 1000 Hrs. | | | | |
| Clean fuel tank and filter | | | | ● | |
| Check fuel tube | Every 2 years (Replace if necessary) | | | | |

* ● Internal vent carburetor with dual element type only.
● Cyclone type every 6 months or 150 hours.

ENGLISH

## STORAGE

In case the machine should not be used for more than 30 days, make sure that the room in which it is stored presents a suitable shelter from heat sources, weather changes or anything which can cause rust, corrosion or damages to the machine.

☞ Have **qualified** personnel prepare the machine for storage.

### GASOLINE ENGINE

Start the engine: It will run until it stops due to the lack of fuel.

Drain the oil from the engine sump and fill it with new oil (see page M25).

Pour about 10 cc of oil into the spark plug hole and screw the spark plug, after having rotated the crankshaft several times.

Rotate the crankshaft slowly until you feel a certain compression, then leave it.

In case the battery, for the electric start, is assembled, disconnect it.

Clean the covers and all the other parts of the machine carefully.

Protect the machine with a plastic hood and store it in o dry place.

### DIESEL ENGINE

For short periods of time it is advisable, about every 10 days, to make the machine work with load for 15-30 minutes, for a correct distribution of the lubricant, to recharge the battery and to prevent any possible bloking of the injection system.

For long periods of inactivity, turn to the after soles service of the engine manufacturer.

Clean the covers and all the other parts of the machine carefully.

Protect the machine with a plastic hood and store it in a dry place.

**IMPORTANT**

In the storage and cust off operations avoid that polluting substances, liquids, exhausted oils, etc. bring damage to people or things or can cause negative effects to surroindings, health or safety respecting completely the laws and/or dispositions in force in the place.

## DISASSEMBLE

☞ Have **qualified** personnel disassemble the machine and dispose of the parts, including the oil, fuel, etc., in a correct manner when it is to be taken out of service.

As disassemble we intend all operations to be made, at utilizer's care, at the end of the use of the machine.
This comprises the dismantling of the machine, the subdivision of the several components for a further reutilization or for getting rid of them, the eventual packing and transportation of the eliminated parts up to their delivery to the store, or to the bureau encharged to the disassemble or to the storage office, etc.

The several operations concerning the disassemble, involve the manipulation of fluids potentially dangerous such as: lubricating oil and battery electrolyte.

The dismantling of metallic parts liable to cause injuries or wounds, must be made wearing heavy gloves and using suitable tools.

The getting rid of the various components of the machine must be made accordingly to rules in force of law a/o local rules.
**Particular attention must be paid when getting rid of: lubricating oils, battery electrolyte, and inflamable liquids such as fuel, cooling liquid.**

The machine user is responsible for the observance of the norms concerning the environment conditions with regard to the elimination of the machine being disassemble and of all its components.

In case the machine should be disassemble without any previous disassembly it is however compulsory to remove:
- tank fuel
- engine lubricating oil
- cooling liquid from the engine
- battery

**NOTE**: The manufacturer is involved with disassembling the machine **only** for the second hand ones, when not reparable.

This, of course, after authorization.

In case of necessity for first aid and fire prevention, see page M2.1.

| GENERATOR | GM 5-200 HBM | GM 7-200 HBT |
|---|---|---|
| Three-phase power max | --- | 7 kVA (5.6 kW) / 400 V / 10.1 A |
| Three-phase power PRP | --- | 6.5 kVA (5.2 kW) / 400 V / 9.4 A |
| Single-phase power max | 5 kVA (kW) / 230 V / 21.7 A | --- |
| Single-phase power PRP | 4 kVA (kW) / 230 V / 17.4 A | 4 kVA / 230 V / 17.4 A |
| Single-phase power max | 2.5 kVA (kW) / 115 V / 21.7 A | --- |
| Single-phase power PRP | 2 kVA (kW) / 115 V / 17.4 A | --- |
| Frequence | 50 Hz | |
| **ALTERNATOR** | Self-excited, self-regulated | |
| Type | Single-phase, synchronous | Three-phase, synchronous |
| Insulating class | H | |
| **ENGINE** | | |
| Mark / Model | HONDA GX 390 (STAGE V) | |
| Type / Cooling system | Gasoline OHV 4-Stroke / Air | |
| Cylinders / Displacement | 1 / 389 $cm^3$ | |
| Net power Stand-by | 8.2 kW (11.1 HP) | |
| *Power | 3000 rpm | |
| Fuel consumption (Welding 60%) | 2.1 l/h | |
| Engine oil capacity | 1.1 l | |
| Starter | Recoil | |
| ** Maximum output (not overloadable) according to SAE J 1349* | | |
| **GENERAL SPECIFICATIONS** | | |
| Fuel tank capacity | 6.1 l | |
| Running time (Welding 60%) | 2.9 h | |
| Protection | IP 23 | |
| *Dimensions max. Lxwxh | 870x525x613 | |
| *Weight (dry) | 97 Kg | 100 Kg |
| Measured acoustic power LwA (pressure LpA) | 97 dB(A) (71 dB(A) @ 7m) | |
| Guaranteed acoustic power LwA (pressure LpA) | 97 dB(A) (71 dB(A) @ 7m) | |

** Dimensions and weight are inclusive of all parts without wheels and towbar.*

## POWER

Declared power according to ISO 3046-1 (temperature 25°C, 30% relative humidity, altitude 100 m above sea level).
It's admitted overload of 10% each hour every 12 h.
In an approximative way one reduces: of 1% every 100 m altitude and of 2.5% for every 5°C above 25°C.

## ACOUSTIC POWER LEVEL

**ATTENTION:** The concrete risk due to the machine depends on the conditions in which it is used. Therefore, it is up to the end-user and under his direct responsibility to make a correct evaluation of the same risk and to adopt specific precautions (for instance, adopting a I.P.D. -Individual Protection Device)
Acoustic Noise Level (LwA) - Measure Unit dB(A): it stands for acoustic noise released in a certain delay of time. This is not submitted to the distance of measurement.
Acoustic Pressure (Lp) - Measure Unit dB(A): it measures the pressure originated by sound waves emission. Its value changes in proportion to the distance of measurement.
The here below table shows examples of acoustic pressure (Lp) at different distances from a machine with Acoustic Noise Level (LwA) of 95 dB(A)

Lp a 1 meter = 95 dB(A) - 8 dB(A) = 87 dB(A)
Lp a 4 meters = 95 dB(A) - 20 dB(A) = 75 dB(A)
Lp a 7 meters = 95 dB(A) - 25 dB(A) = 70 dB(A)
Lp a 10 meters = 95 dB(A) - 28 dB(A) = 67 dB(A)

**PLEASE NOTE:** the symbol when with acoustic noise values, indicates that the device respects noise emission limits according to 2000/14/CE directive.

| C.C. WELDING | GM 5-200 HBM | GM 7-200 HBT |
|---|---|---|
| Welding processes | SMAW (STIK - Shielded Metal Arc) | |
| Range of current | 40A / 21.6V - 200A / 20V | |
| No-load voltage | 85V | |
| Service | 160A / 26.4V - 60%, 120A / 24.8 - 100% | |



## OUTPUT CARACTERISTIC

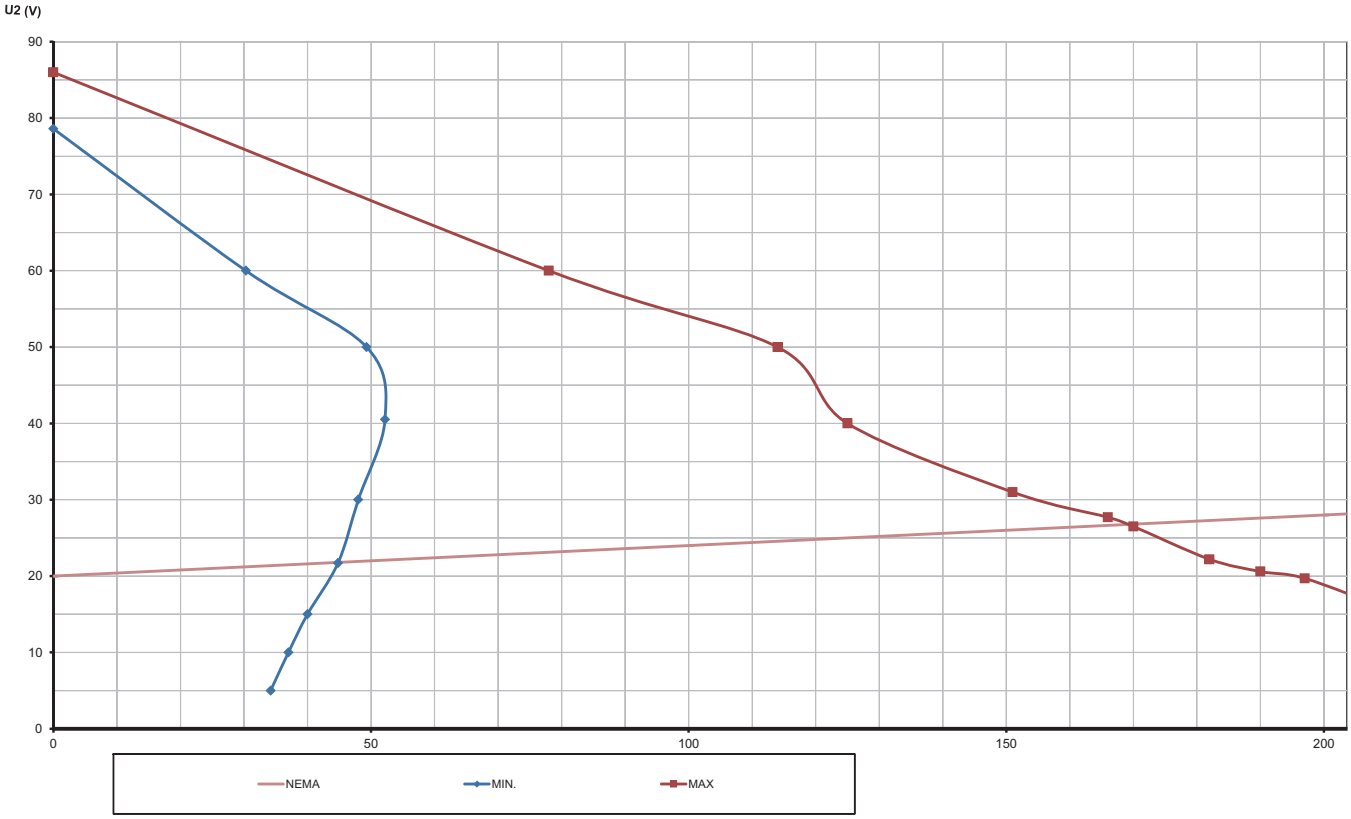

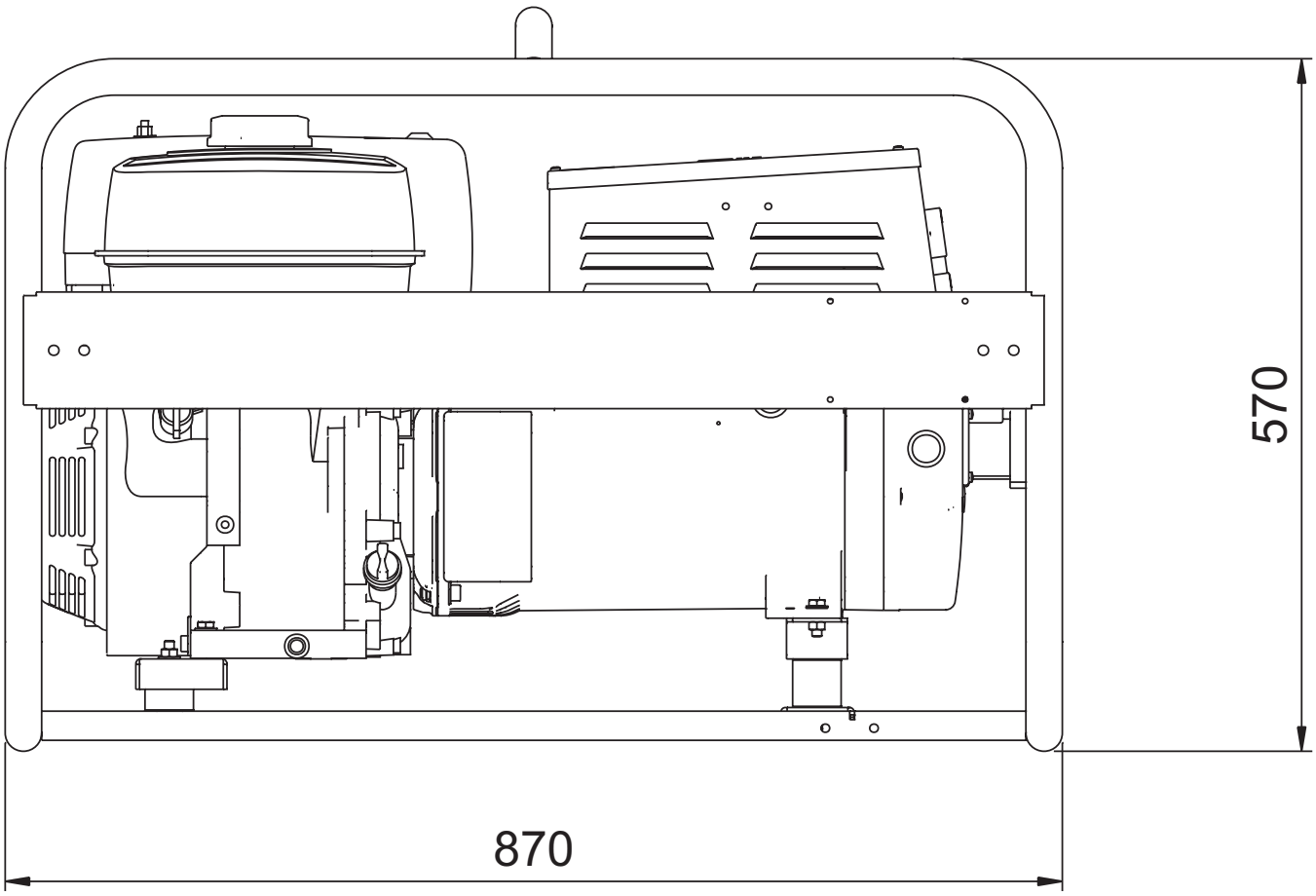
570
870

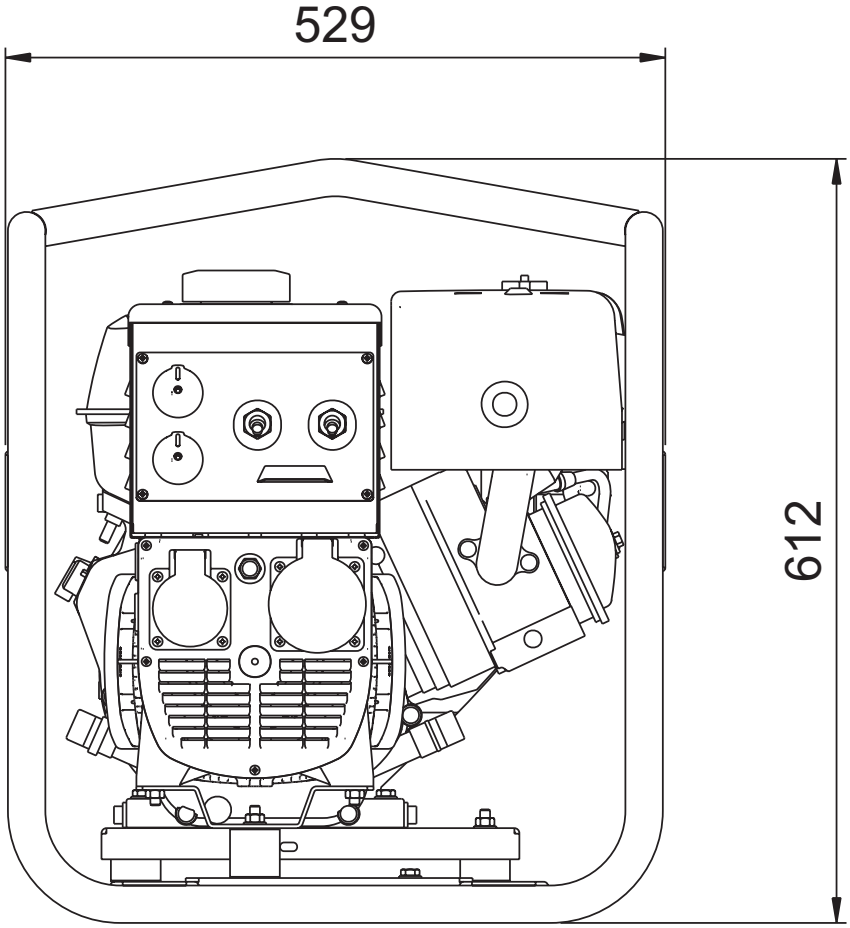
529
612

**MOSA div. della BCS S.p.A.**
Viale Europa, 59  20090 Cusago (Milano) Italy
Tel.+39 - 0290352.1  Fax +39 - 0290390466  www.mosa.it