Aventa comfort

2nd generation

EN **Installation instructions** Page 02

Table of Contents

1 About these instructions 3
1.1 Document number 3
1.2 Validity 3
1.3 Target group 3
1.4 Supporting documents 3
1.5 Symbols and means of representation 3
1.6 Warnings 3
1.7 Abbreviations and glossary 3
2 Safety instructions for experts 4
3 Transport 5
3.1 Safety instructions 5
3.2 Transport damage 5
3.3 Intermediate storage of the product 5
3.4 Means of transport 5
4 Scope of delivery 6
4.1 Type plate 6
5 Accessories 7
6 Installation 7
6.1 Safety instructions 7
6.2 General information for installation 8
6.3 Choosing an area on the vehicle roof 8
6.4 Roof cut-out 9
6.5 Routing the connector cables to the air conditioning system 10
6.6 Installing the external unit (without adapter frame) 10
6.7 Installing the external unit (with adapter frame) 11
6.8 Screwing on the mounting frame 12
6.9 Electrical connection of control panel 13
6.10 230 V AC electrical connection 14
6.11 Cable routing and strain relief 16
6.12 Installing the air distributor 16
6.13 Condensation trap 18
7 Initial start-up 19
7.1 Finishing work 19

1 About these instructions

These instructions are part of the product.

► Also make safety instructions available to other users.

1.1 Document number

The document number of these instructions can be found in the footer of every inside page and on the back page.
The document number consists of

- Part number (10 digits)
- Revision status (2 digits)
- Publication date (month/year)

1.2 Validity

These instructions are intended for:

- Aventa comfort 2.G

hereinafter referred to as the air conditioning system or Aventa.

1.3 Target group

These instructions are intended for experts.

Only competent, trained personnel (experts) may install and repair the Truma product and carry out the function check with consideration of the installation and operating instructions and the current recognised rules of engineering. Experts are persons who, based on their professional training, their knowledge of and experience with Truma products and the relevant standards, are able to carry out the required work properly and recognise potential hazards.

ⓘ For the sake of simplicity, in the following, no distinction is made between genders. Gender equality is intended in the way terms are used.

1.4 Supporting documents

More information about this air conditioning system, such as intended use, safety instructions, product description, operation, technical data and warranty can be found in the respective operating instructions.

1.5 Symbols and means of representation

Symbol	Meaning
⚠	Warning about dangers to persons
	Expert
ⓘ	Additional information to provide a better understanding or to optimise work processes.
►	Symbol for an action. Something must be done here.
(Fig. 3-1)	Reference to a picture e.g. Figure 3 – number 1

1.6 Warnings

These instructions contain warnings about potential injuries or damage to property.

► Always read and observe warnings.

Warning word	Meaning
DANGER	Danger for persons. If these instructions are ignored, it will result in death or serious injury.
WARNING	Danger for persons. If these instructions are ignored, it may result in death or serious injury.
CAUTION	Danger for persons. If these instructions are ignored, it may result in minor injury.
NOTICE	Information to prevent material damage

1.7 Abbreviations and glossary

Word	Meaning
Line power	Power supplied to the vehicle from outside. A connection is usually established from a power supply socket at the campsite to the external socket on the vehicle, using an extension cable.

2 Safety instructions for experts

Below are some additional safety instructions to draw experts' attention to particular dangers associated with installing and repairing Truma products.

► Read and observe the following information to protect yourself and your surroundings.

Installation, dismantling and repair work must comply with the local conditions and regulations and the recognised rules of engineering.

► Observe statutory accident prevention regulations.

► Observe regulations regarding personal protective equipment.

► Observe statutory environmental protection regulations.

2.7.1 Safety harness

There is a risk of falling when working on vehicle roofs (installation / repair of roof-mounted air conditioning systems).

► Wear fall protection / safety harness.

► Work from a scaffold next to the vehicle.

2.7.2 Handling hot surfaces

The surfaces of some components can become very hot. These are on the air conditioning system, e.g. heat exchanger, fan and compressor.

► Do not touch hot surfaces.

If a test run is carried out within the framework of installation or repair, parts of the air conditioning system can become very hot.

► Only touch parts when they have cooled again.

At the initial start-up there could be some remaining installation material that could ignite on hot surfaces.

► Following installation, remove flammable material (such as paper, cardboard, polystyrene, wood shavings, adhesives) from any surfaces that may become hot.

2.7.3 Handling electricity

Work on the electrical system must be done by a qualified electrician.

► Observe country-specific and voltage-related rules and regulations.

► Observe vehicle conditions.

► Ensure the necessary workplace safety and wear personal protective equipment.

Installation must be carried out in accordance with all applicable local and national regulations, including the latest versions of the standards.

2.7.4 Mains voltage 230 V AC

Some parts of the air conditioning system may be live. Touching live parts can be fatal or lead to serious injuries.

► When working on electrical installations or components, switch off the power supply, for example by means of fuses or residual current circuit-breakers on the vehicle's main distribution board. Prevent the power supply from being switched back on.

Motor homes and caravans may have independent 230 V AC power supplies (e.g. power inverter, generator, solar panels, batteries, external socket for mains supply).

► Pay heed to self-sufficient power supply.

► Make sure when carrying out electrical work in the vehicle that no other person can unintentionally plug a live connector cable into the external socket.

► External power supply should be prevented for this purpose. For example, insert a blanking plug with the warning "Caution! Electrical work under way in the vehicle" into the external socket.

Internal capacitors may have stored residual voltage after disconnecting the appliance from the mains supply.

► Discharge capacitors before disposing of them or having them replaced by an expert.

2.7.5 Protection against electrostatic discharge (ESD)

Electrostatic discharges can damage electronic components.

► Observe the ESD regulations.

2.7.6 Air conditioning system safety

Notices are attached to the air conditioning system.

► Observe the notices that are attached directly to the air conditioning system.

► Keep the notices in a legible condition and do not cover them.

Protective devices are fitted to the air conditioning system. Risk of injury if the protective devices are missing or defective.

► After installation make sure that all protective equipment (covers, safety instructions, earth cables, etc.) are present and attached.

► Replace faulty protective equipment and equipment that has become unusable.

2.7.7 Original spare parts

Using parts from manufacturers other than Truma can have an effect on the safety of the air conditioning system, damage the vehicle and limit the warranty and manufacturer's liability.

► Use only original components and spare parts from Truma.

No warranty claim in the event of modifications, use of non-Truma components or incorrect assembly.

3 Transport

3.1 Safety instructions

Read the safety instructions before starting work. This prevents injuries and damage to the product.

Wearing personal protective equipment

Wearing personal protective equipment protects against injuries.

► Wear safety shoes with protective toecaps.

► Wear safety gloves.

Risk of damage to property

Improper transport of the product can lead to malfunctions and damage to the product.

► Avoid heavy impacts, vibrations and shocks.

► Avoid jerky lowering and lifting of the air conditioning system.

► Avoid driving quickly over obstacles such as steps, edges and pipes.

Danger from tipping or falling transported goods

A damaged means of transportation or incorrectly secured transported goods can lead to accidents.

► Use only suitable, undamaged and fully functional industrial trucks and load handling attachments with sufficient load capacity.

► Attach transport restraints and transport devices.

► Secure transported goods against slipping.

► Avoid fast cornering.

3.2 Transport damage

Obvious transport damage (damaged packaging)

► After delivery, check the goods and check the contents for obvious transport damage.

Any obvious transport damage must be expressly noted on the consignment note with the date and time before the goods are accepted. The carrier must confirm the transport damage by signature.

The recipient must immediately notify the sender in writing of any obvious transport damage.

Hidden transport damage (damaged contents)

► After delivery, check the goods and check the contents for hidden transport damage.

► The recipient must immediately report hidden transport damage to the sender in writing.

3.3 Intermediate storage of the product

► Store the product in its original packaging. This protects the product from damage and soiling.

3.4 Means of transport

Authorised means of transport

The air conditioning system can be transported using the following means of transport:

- Fork lift truck
- Electric pallet truck
- Hand pallet truck
- Vacuum lifter

Lift the air conditioning system with a vacuum lifter only at the permitted lifting points (Fig. 1-3).

NOTICE
Risk of damage to the hood during service work.

► Lift the air conditioning system with a vacuum lifter only during initial installation.

► When removing and reinstalling the air conditioning system, do not lift it by the hood.

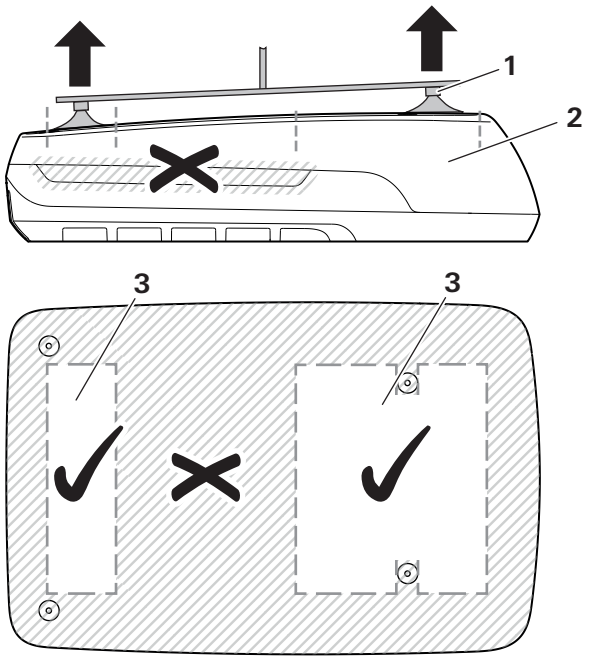

Fig. 1

CAUTION
Injury and damage to property as a result of incorrect transport.

The air conditioning system may fall down if the permitted lifting points are not observed. People may be injured as a result of this.

► Only lift the air conditioning system at the marked lifting points.

► Wear personal protective equipment.

4 Scope of delivery

► Check that the delivery is complete:

Air conditioning system, scope of delivery (single pack)

1 x Aventa comfort 2.G, white / black cpl.
1 x Application Tracking Label Aventa comfort 2.G, white
1 x Aventa comfort 2.G installation instructions
1 x Aventa comfort 2.G operating instructions
1 x Aventa comfort 2.G installation template

Scope of delivery, air conditioning system with Truma iNet X Interface AC (single pack)

1 x Aventa comfort 2.G, white / black cpl.
1 x Application Tracking Label Aventa comfort 2.G, white
1 x Aventa comfort 2.G installation instructions
1 x Aventa comfort 2.G operating instructions
1 x Aventa comfort 2.G installation template
1 x Truma iNet X Interface AC

Air conditioning system, scope of delivery (bulk pack)

3 x Aventa comfort 2.G, white cpl.
6 x bar code Aventa comfort 2.G, white
3 x Aventa comfort 2.G installation instructions
3 x Aventa comfort 2.G operating instructions
3 x Aventa comfort 2.G installation template

Air distributor Basic, scope of delivery (single pack)

1 x air distributor, stone / cappuccino
1 x air distributor mounting frame cpl.
1 x Aventa 2.G screw accessory kit
1 x Aventa 2.G remote control

Premium air distributor, scope of delivery (single pack)

1 x air distributor, stone / cappuccino
1 x air distributor mounting frame cpl.
1 x Aventa 2.G screw accessory kit
1 x Aventa 2.G remote control

4.1 Type plate

The type plate is affixed to the underside of the external unit (Fig. 2-1). The duplicate type plate is glued to the back of the operating instructions. The application tracking label is enclosed with the installation instructions.

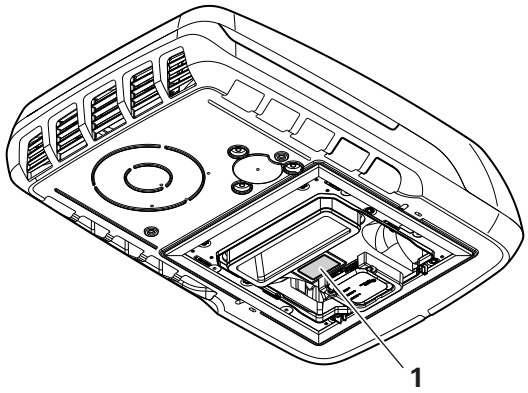

Fig. 2

► Affix the enclosed application tracking label to a suitable, easily accessible place in the vehicle. This means that the details of the air conditioning system are quickly at hand when servicing is required.

5 Accessories

The available accessories are listed below.

Adapter frame with extension

An optional adapter frame is available for installation in profiled vehicle roofs. The set includes the extension adapter frame.

Vehicle	Part. no.
PSA / PMA	40900-08
Ford Transit	40900-09
MB Sprinter	40900-10

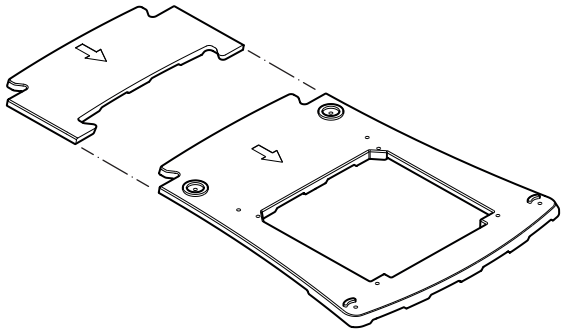

Fig. 3

Roof thickness adapter 20 mm

The 20 mm roof thickness adapter is used for roofs that cannot be bridged with the air conditioning system and air distributor.
The 20 mm roof thickness adapter can be added if required to bridge greater roof thicknesses.

- 1 piece (part no. 40091-01319).

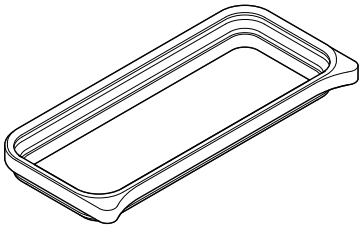

Fig. 4

6 Installation

The air conditioning system must be installed in accordance with current local or national regulations.

6.1 Safety instructions

WARNING
There is a risk of falling when working on vehicle roofs
Vehicle roofs can be very slippery due to wetness, icing or dirt (e.g. damp leaves).
- ► Wear fall protection / safety harness.
- ► Work from scaffolding or a stable ladder next to the vehicle.
- ► Wear sturdy, non-slip shoes.
- ► Get a second person to help.

WARNING
Personal injury due to lack of protective equipment
- ► Always wear personal protective equipment (suitable safety goggles or face protection and safety shoes) when working on or with the air conditioning system.
- ► Observe the operating instructions.

WARNING
Fire hazard due to refrigerant leakage
- ► The refrigerant system contains the flammable R 290 refrigerant and may be opened only by Truma.
- ► In particular, do not screw in any long screws or similar near the air conditioning system, as this can damage the air conditioning system and cause refrigerant to escape.

CAUTION
Injuries caused by handling heavy air conditioning systems.
The air conditioning system is very heavy, which can lead to physical strain when handling it.
- ► Ensure a secure footing.
- ► Work with several people.
- ► Use suitable aids (ladders, platforms, forklift trucks, lifting platforms).

CAUTION
Cuts caused by sharp edges
There are some sharp-edged sheet metal angles inside the product or at assembly interfaces.
- ► Wear safety gloves.

CAUTION
Personal injury due to moving parts
- ► Do not reach into moving parts or handle moving parts during operation.

CAUTION
Personal injury due to solvents
When installing the system, sealants, cleaning agents or solvents are used which can be harmful to health.
- ► Observe the processing instructions for the product used.
- ► Observe the safety instructions for the product used.
- ► Wear personal protective equipment.
- ► Keep your distance.

CAUTION
Burns from hot parts
The air conditioning system contains parts that can become very hot during operation. If a test run is carried out within the framework of installation or repair, parts of the air conditioning system can become very hot.
- ► Only touch parts when they have cooled again.

CAUTION
Burns due to hot air discharge at the external unit
Warm air escapes from the external unit, which can injure people on the roof.
- ► Do not linger around the air conditioning system when it is running.

CAUTION
Ice burn from refrigerant
If there is a fault in the cooling system, refrigerant may escape. Contact with refrigerant can result in skin burns.
- ► Wear personal protective equipment.

6.2 General information for installation

There are several options for creating the roof cut-out for the air conditioning system:

- The roof cut-out must be cut out again in the vehicle roof.
- The roof cut-out from an existing skylight can be used. The skylight (window) is removed and the roof cut-out may be adapted.

The air conditioning system is fixed in the roof cut-out with a mounting frame. The condensate from the air conditioning system is discharged externally via the vehicle roof. Drainage openings are provided in the external unit for this purpose. Adapter frames for various vehicle types are optionally available for installation on a profiled vehicle roof.

6.2.1 Procedure

Different work steps are required depending on the initial situation.

- ► Read the installation instructions completely before starting work. Installation must be carried out in accordance with the manufacturer's instructions.

6.3 Choosing an area on the vehicle roof

- The roof of the vehicle (roof thicknesses of 25 to 110 mm) must be level and smooth. Exception, see adapter frame for profiled vehicle roofs.
- The air conditioning system should be installed as close to the middle of the vehicle as possible to guarantee maximum efficiency.
- The inclination of the air conditioning system must not exceed 8 % / 4.5 °.
- Make sure that there are no obstacles for installation inside or outside.
- Electrical cables may run through the vehicle roof. Disconnect all poles of all voltage sources before starting work.
- The roof load must not be exceeded (see vehicle manufacturer's specifications).
- A reinforcement frame must be installed around the roof cut-out between the upper and lower roof surface (e.g. wooden frame). This prevents the roof from deforming when the air conditioning system is screwed to the mounting frame. The insulation may have to be removed.
- When the skylight with safety ventilation is replaced by the air conditioning system, it must be ensured that the safety ventilation is restored in another suitable location.
- When the roof-mounted air conditioning system has been installed, any nearby roof cowl must extend at least 10 cm above the air conditioning system. The roof cowl may have to be extended (observe specifications of the heater manufacturer).
- If the air conditioning system has been turned on its hood or moved out of the horizontal installation position, you must wait 2 hours after the air conditioning system has been returned to the correct position before switching it on.
  This time is necessary for the oil in the refrigeration circuit to settle and allow trouble-free operation.

- ► Check that there is sufficient space on the roof and the vehicle ceiling to install the air conditioning system. The installation template can be used for this (see "6.3.4 Installation template").
- ► Check conditions and feasibility:
  - Load-bearing capacity of the roof
  - Distances to attachments / empty spaces
  - Cable routing of control cables and electrical connection
  - Pipes or struts near the planned roof cut-out.

6.3.1 Dimensions

See "Technical data" in the operating instructions or installation template (enclosed).

6.3.2 Empty spaces

There must be a 20 mm gap at the front of the external unit and 100 mm at the sides. The gap at the back must be at least 30 mm or, better still, 200 mm.

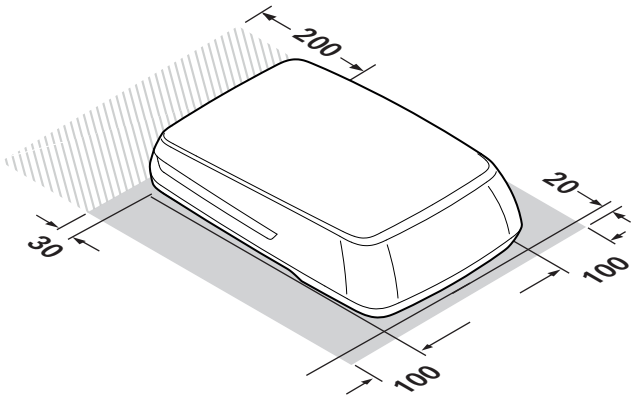

Fig. 5

The clearance around the air distributor must allow the air to blow out freely. The side clearance must be at least 40 mm. The pivoting range of flaps and doors must be taken into consideration.

NOTICE
The air ducts for the intakes must not be blocked.
► The space requirement must be strictly adhered to.

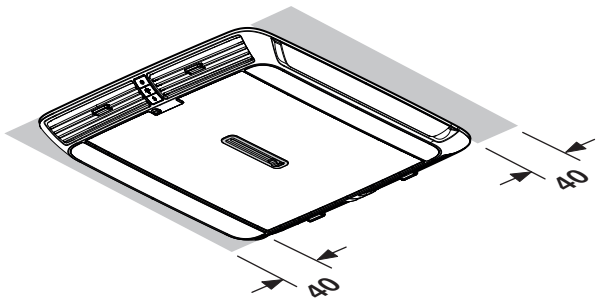

Fig. 6

6.3.3 Planning the cable routing

When installing the air conditioning system, the routing of the cables must be taken into account (mains cable, CAN bus cable).

- When using an external control panel (Truma iNet X Panel, Truma iNet X Pro Panel, vehicle manufacturer's control panel), a CAN bus cable must be laid.
  Note: Plug connections are the same on both sides of the cable. If necessary, attach a terminating resistor.
- When using the Truma iNet X Interface AC (optional) and operation with the Aventa 2.G remote control, no additional control panel cable to the air conditioning system is required.
- To make it easier to retrofit control units at a later date, control cables can be laid when the air conditioning system is first installed. Route any control cables not currently in use to a suitable connection point in the vehicle (e.g. in the wardrobe) and secure them there with cable ties, for example.

6.3.4 Installation template

An installation template (Fig. 7) is included with the air conditioning system. The installation template is used to choose the correct position on the vehicle roof and to maintain the empty space around the device.

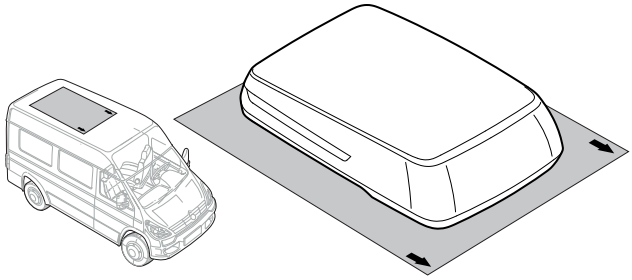

Fig. 7

6.4 Roof cut-out

6.4.1 Using an existing roof cut-out

The vehicle has a skylight (window) at a suitable point in the vehicle roof. The skylight is removed and the resulting roof cut-out can be used for the air conditioning system.

- at least 356 x 356 mm (14 x 14 in.)
- maximum 400 x 400 mm (15 ¾ x 15 ¾ in.)

► Remove the existing skylight.
► If necessary, enlarge the roof cut-out.
► Remove sealant residue and unevenness.
► Fill screw holes with car body sealant (Fig. 8).

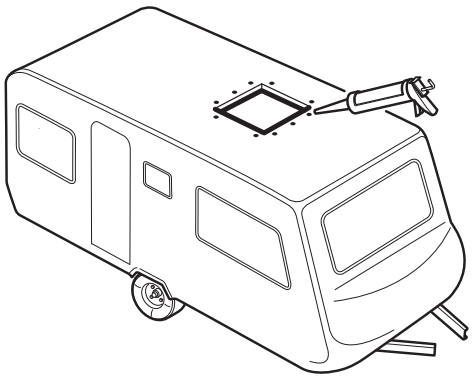

Fig. 8

6.4.2 Creating a new roof cut-out

The vehicle does not yet have a roof cut-out at a suitable point in the vehicle roof. This must be created.

- at least 356 x 356 mm (14 x 14 in.)
- maximum 400 x 400 mm (15 ¾ x 15 ¾ in.) (preferred)

The exact position and dimensions of the roof cut-out depend on the roof structure and the position of the roof frames and cables.

NOTICE
Malfunctions due to damaged cables
Cables running in the roof can be damaged if the roof is cut open.
- ► Check the roof for cables in the area of the planned roof cut-out.
- ► Carry out a residual current and short-circuit test after installation.

► Transfer the dimensions of the roof cut-out to the vehicle roof according to the technical drawing – or place the installation template on the vehicle roof at the installation location. Fix the installation template with adhesive tape. Use a pointed tool (marking needle, centre punch) to pierce and mark the corners of the roof cut-out through the template onto the vehicle roof.

ⓘ Cover interior fittings (furniture, floor) with paper or blankets to protect against chips and dirt.

► Make the cut-out, using a suitable tool (drill, jigsaw, etc.).

6.5 Routing the connector cables to the air conditioning system

► Create the lead-through to the connection point for the mains cable and control panel cable in the false ceiling, for example. Avoid sharp edges and chafing points; use conduit or cable protection.

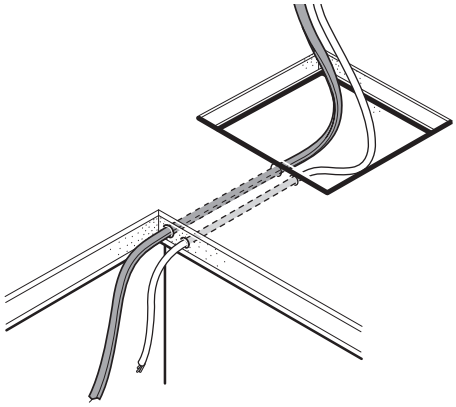

Fig. 9

6.6 Installing the external unit (without adapter frame)

The air conditioning system can be mounted directly on smooth, unprofiled vehicle roofs without an adapter frame.
This does not apply to profiled vehicle roofs. An adapter frame is available as an accessory for this (see “5 Accessories” on page 7).

It is not necessary to use an additional sealant to seal the air conditioning system, as the attached seal seals in direct contact with the vehicle roof (Fig. 14).

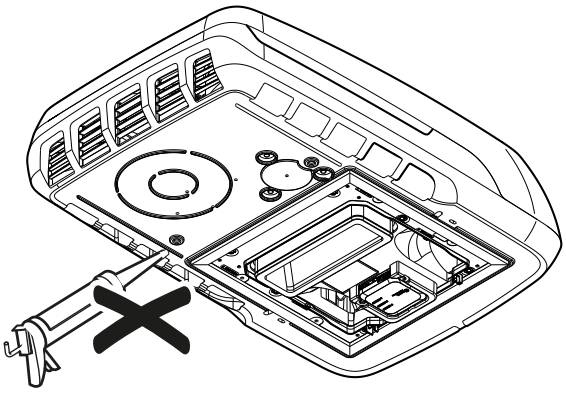

Fig. 10

6.6.1 Positioning the external unit

WARNING
Damage to health from sealants
The sealant used may pose health risks (solvents, vapours, fire hazard).
- ► Observe the processing instructions for the sealant used.
- ► Observe the safety instructions for the sealant used.
- ► Wear personal protective equipment.

► Lift the air conditioning system onto the vehicle roof and position it above the roof cut-out. Do not push the device on the vehicle roof, as this could damage the seal or positioning lugs.

► Use the two positioning lugs on the external unit as a front stop for alignment (Fig. 11). The external unit must then be moved back so that the screw holes for the mounting frame are accessible.

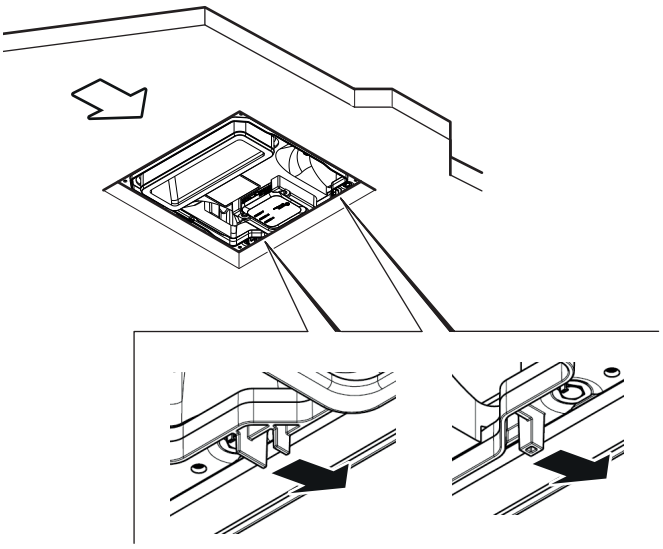

Fig. 11

6.7 Installing the external unit (with adapter frame)

Optional adapter frames for various vehicle types are available for installing the air conditioning system in profiled vehicle roofs (see “5 Accessories” on page 7). These are made of EPP (expanded polypropylene) and fit snugly onto vehicle roofs (PSA/PMA, Mercedes Benz Sprinter, Ford Transit).
The adapter frame (Fig. 17-2) is mounted between the vehicle roof (Fig. 17-3) and the air conditioning system (Fig. 17-1).

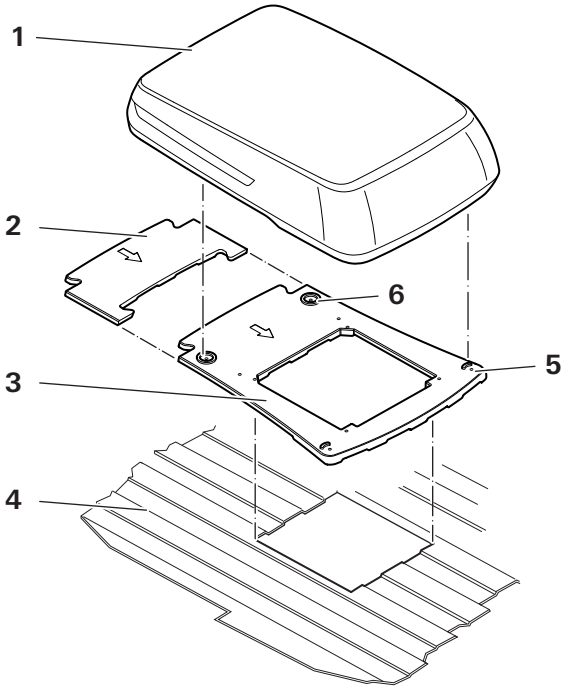

Fig. 12

Preparing the vehicle roof

The adapter frame must rest fully on the vehicle roof and must not protrude beyond the vehicle roof.
The lateral position of the adapter frame on the vehicle roof is determined by the profiling.

- ► Place the adapter frame on the vehicle roof without sealant and check whether the profiling matches the vehicle roof.
- ► Mark the roof cut-out or transfer it, using the installation template.

The roof cut-out must be a minimum of 356 x 356 mm and a maximum of 400 x 400 mm.

- ► Create the roof cut-out.
  See: “6.4 Roof cut-out” on page 9.

At the sealing surfaces, the vehicle roof must be free of oil, grease and other contaminants.

- ► Clean the vehicle roof around the installation area. If necessary, allow to dry or steam off.

The vehicle roof below the air conditioning system must not have any recesses or holes.

- ► If necessary, fill or seal the vehicle roof in the installation area with car body sealant.

Preparing the adapter frame

The adapter frame is bonded to the vehicle roof with a non-hardening, removable sealant (e.g. Teroson RB 2759 or Dekaseal 8936).

There are two grooves (Fig. 13-1) (Fig. 13-2) all around the bottom of the adapter frame, as well as in the extension of the adapter frame (Fig. 13-3). The sealant is applied to these. Ensure that there is no height difference between the adapter frame and the extension due to uneven application of sealant.

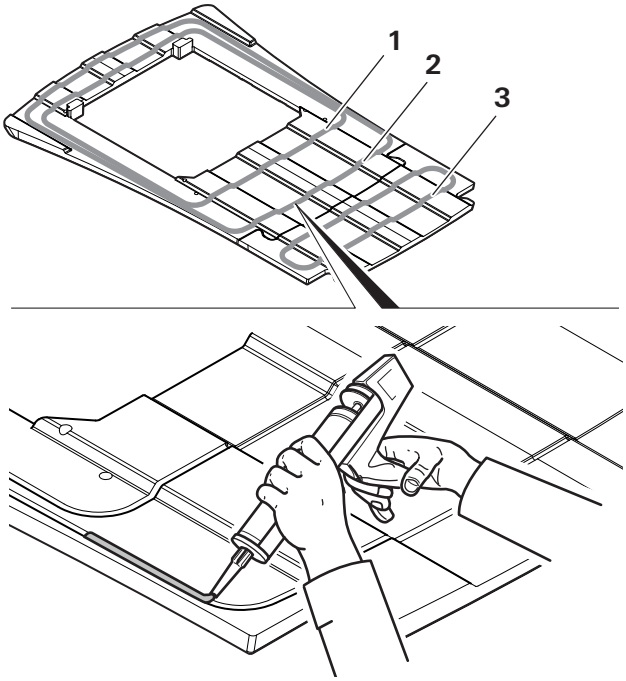

Fig. 13

- ► Apply sealant in the grooves with a maximum thickness of 1 cm.
- ► Before fitting, check that the entire groove is filled with sealant completely, continuously and sufficiently.

WARNING
Damage to health from sealants
The sealant used may pose health risks (solvents, vapours, fire hazard).
- ► Observe the processing instructions for the sealant used.
- ► Observe the safety instructions for the sealant used.
- ► Wear personal protective equipment.

NOTICE
Water damage due to inadequate sealing
If the sealant has not been applied sufficiently and completely, water can enter the vehicle interior at these points.
- ► Fill the entire groove with sealant.

Positioning the adapter frame

The lateral position of the adapter frame is determined by the profile of the vehicle roof. The position in the direction of travel is determined by two stops on the adapter frame (Fig. 16-1).

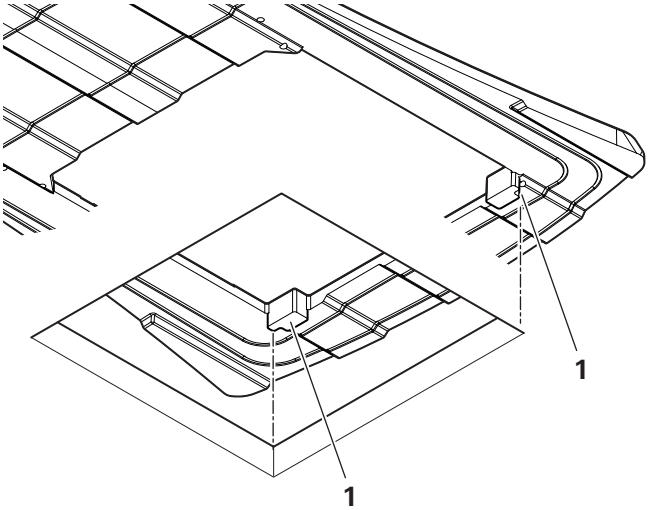

Fig. 14

- ► Insert the adapter frame into the roof cut-out. Make sure that the engraved arrow points (Fig. 17-2) in the direction of travel.
- ► Aligning the adapter frame. To do this, carefully push the adapter frame forwards until the stops are in contact with the front edge of the roof cut-out.
- ► Press on the adapter frame and remove any sealant that has been pressed out. Observe the safety instructions of the sealant manufacturer.

NOTICE
Water damage due to inadequate sealing
Inaccurate positioning of the adapter frame means that the seal to the air conditioning system is not pressed on properly.
- ► Align the adapter frame correctly with the front stops.

Positioning the air conditioning system

When the adapter frame has been fitted, the air conditioning system can be installed. The sealant does not need to harden beforehand.

The adapter frame has four positioning aids. Two at the front (Fig. 12-5) and two at the back (Fig. 12-6). This is where the air conditioning system is placed and thus correctly positioned.

NOTICE
Water damage due to incorrectly positioned air conditioning system
An incorrectly positioned air conditioning system can lead to leaks and water ingress.
- ► Place the air conditioning system exactly on the adapter frame in the positioning aids.
- ► Lift the air conditioning system onto the vehicle roof. See: “6.11 Cable routing and strain relief” on page 16.
- ► Position the air conditioning unit on the adapter frame and set it down.

6.8 Screwing on the mounting frame

The air conditioning system is attached to the vehicle roof using 4 screws with screw lock and a mounting frame.

WARNING
Personal injury due to falling air conditioning system while travelling
If the air conditioning system is not installed correctly, there is a risk that it will detach from the roof and endanger other road users.
- ► Check the load capacity and roof load of the vehicle before installation.
- ► Install the air conditioning system in accordance with the installation instructions.
- ► Check that the system is firmly seated on the vehicle roof after installation.

- ► If necessary, lift the air conditioning system slightly from below through the roof cut-out and position it exactly above the cut-out by moving it. The seal must not move or detach from the housing.
- ► An arrow is stamped on the mounting frame (Fig. 16-4). Hold the mounting frame so that the arrow points in the direction of travel.
- ► Screw the mounting frame to the air conditioning system with 4 screws (supplied).
- ► Tighten the screws with a torque of 2 Nm.

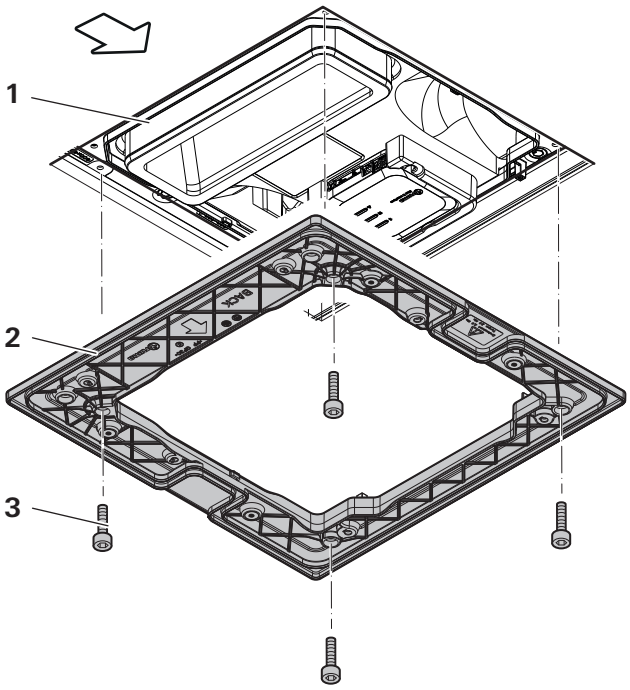

Fig. 15

NOTICE
Inadequate sealing of the connection between the air conditioning system and vehicle roof when using the wrong screw holes on the mounting frame

- ► If possible, always use the outer screw holes (Fig. 16-1) for screwing the mounting frame.
- ► Only use the inner screw holes (Fig. 16-2) if the outer screw holes (Fig. 16-1) are covered by the roof cut-out.

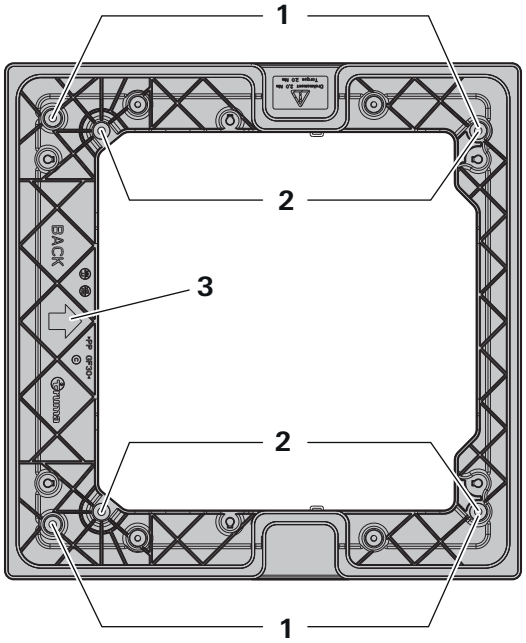

Fig. 16

The supplied screws cannot be used for roof thicknesses over 50 mm because they are too short. Longer screws are not included with delivery. The screws must have an M6 thread and a strength class of 8.8.
The screw length is calculated as:
length = roof thickness + 30 mm
The screws must be secured with low-strength screwlock, such as Loctite.

If the screws are reused (e.g. after dismantling), use low-strength screwlock, such as Loctite, or the screws that are obtainable as spare parts.

6.8.1 Electrical connection

- ► Create a 230 V AC power supply.
  See: “2.7.4 Mains voltage 230 V AC” on page 4.
- ► If necessary, lay control lines.

6.9 Electrical connection of control panel

6.9.1 Operation with Truma iNet X Interface AC (internal installation)

Fastening the Truma iNet X Interface AC in the air conditioning system:

- ► Press the Truma iNet X Interface AC (Fig. 17-3) into the recess on the bottom of the air conditioning system (Fig. 17-1). Ensure that the connection sockets are visible (Fig. 17-2).
- ► Screw in the fastening screws (Fig. 17-4).

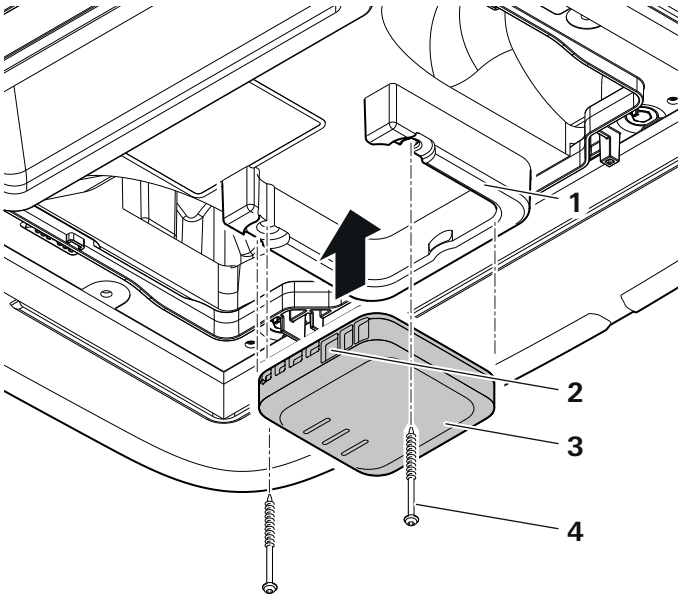

Fig. 17

- ► Disconnect the plug connection on the 4-pin CAN cable from the air conditioning system (Fig. 18-1). The plug connection has a blue dot marking on the plugs.

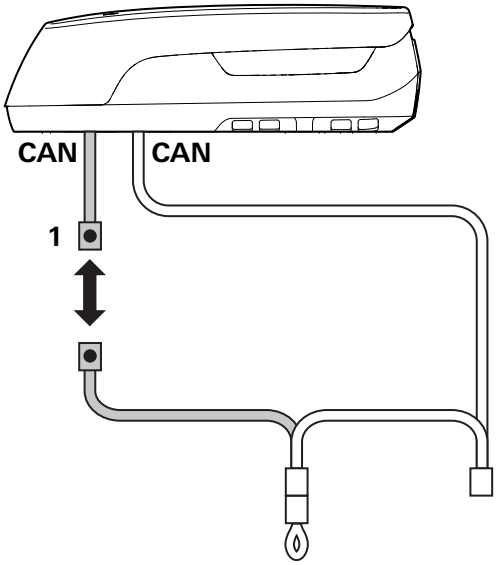

Fig. 18

- ► Connect the 0.15 m CAN cable (Fig. 19-1) (supplied) to the open end of the CAN cable from the air conditioning system (plug with blue dot marking).
- ► Connect the 0.15 m CAN cable and the open end of the CAN cable from the air conditioning system to the CAN sockets of the Truma iNet X Interface AC (Fig. 19-2).

- Connect the terminating resistor to the unused plug of the CAN cable (Fig. 19-3).

NOTICE
Confined cable routing when installing the air distributor with roof thickness adapter
- When laying the cables to the iNet X Interface AC, maintain a gap to the air duct of the external unit.

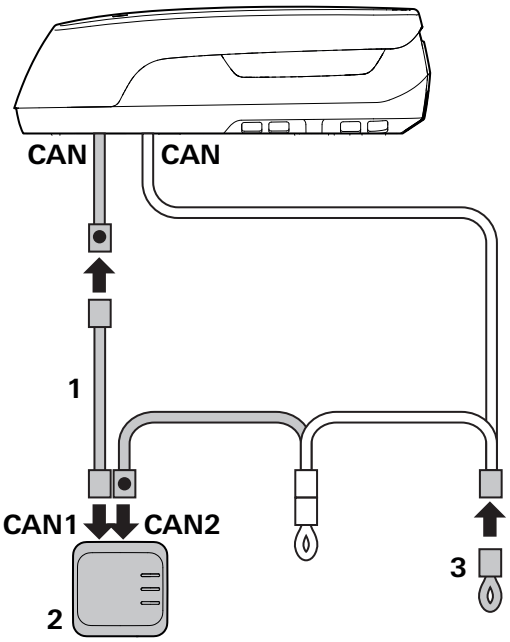

Fig. 19

6.9.2 Operation with external control panel (Truma iNet X Panel / Truma iNet X Pro Panel)

- Lay the CAN cable from the Truma iNet X Panel to the air conditioning system
- Connect the CAN cable (Fig. 20-2) from the Truma iNet X Panel (Fig. 20-3) to the free CAN connector of the CAN cable (Fig. 20-1).
- Connect the CAN + 120R cable, 0.5 m, e4f-x2 (part no. 47000-00216) (Fig. 20-4) to the Truma iNet X Panel. Then connect to the 12 V DC power supply.

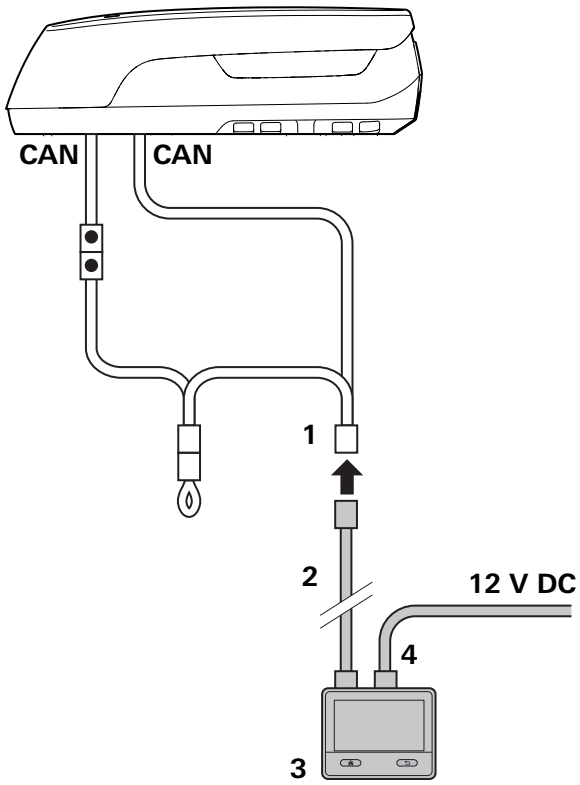

Fig. 20

6.9.3 Operation with other control panels

See the relevant installation instructions for the connected control panel.

6.10 230 V AC electrical connection

The electrical 230 V AC connection must always be carried out by a qualified electrician. The instructions shown here are not intended as instructions for non-experts to make the electrical connection but are additional information for an expert who is employed to do the work.

Safety instructions

WARNING
Electric shock from the mains voltage
Improper installation can lead to property damage, personal injury or death.
- Installation must be carried out by a licensed electrician in accordance with national or local regulations.
- Before starting work, the power supply must be switched off and all poles disconnected.
- Follow the safety instructions when working with mains voltage.
- Install a residual current operated circuit breaker.

WARNING
Risk of fire from short circuits
In the event of a short circuit, very high currents can flow, cables become hot and can ignite.
- ► Follow the safety instructions when working with mains voltage.

WARNING
Electric shock due to electrical voltage on charged capacitors
Capacitors are installed in the air conditioning system which, in the event of a fault, can contain life-threatening voltages even after being switched off.
- ► Capacitors may only be discharged by experts.

WARNING
Personal injury due to appliance catching fire
The contact force at contact points may decrease due to vibrations when travelling. This causes heat to accumulate and creates a fire hazard at the contact points.
- ► Make electrical connections correctly, check them and replace them if necessary.

NOTICE
Damage due to incorrect power supply
An incorrect power supply can lead to damage and malfunctions in the air conditioning system. This is the case, for example, with voltage converters and generators without a sine-shaped curve.
- ► Use only sources with a pure sine wave and without voltage peaks during load changes to supply the air conditioning system with power.

Notes on electrical installation

- The air conditioning system must be electrically connected and earthed in accordance with current local or national standards.
- An insulating device for providing all-pole insulation from the mains with contact clearance of at least 3.5 mm must be provided by the customer for carrying out maintenance and repair work.
- Installation must be carried out with a residual current operated circuit breaker.
- The air conditioning system has electrical protection class I (with earth conductor).
- For connection to the 230 V AC on-board power supply, use the 50 cm long 3-wire mains cable, which is connected to the control unit.
- Use only the original mains cable.
- Lay the mains cable so that it cannot chafe or be damaged. Secure the cable with clamps. Use lead-through bushing or edge protection profiles on sharp edges, e.g. for penetrations in metal walls.
- All cables that run outside the motor home must be splash-proof on the side wall of the motor home.
- Do not connect any additional electrical components to the connector cables.
- Connection cables and lines must be securely fastened and must not be damaged or disconnected due to vibrations.

► Disconnect the vehicle from the 230 V AC mains (mains electricity, generator, power inverter, solar panels, etc.).

► Connect the 230 V AC supply cable (Fig. 21-1) to the 230 V AC on-board power supply according to the table.

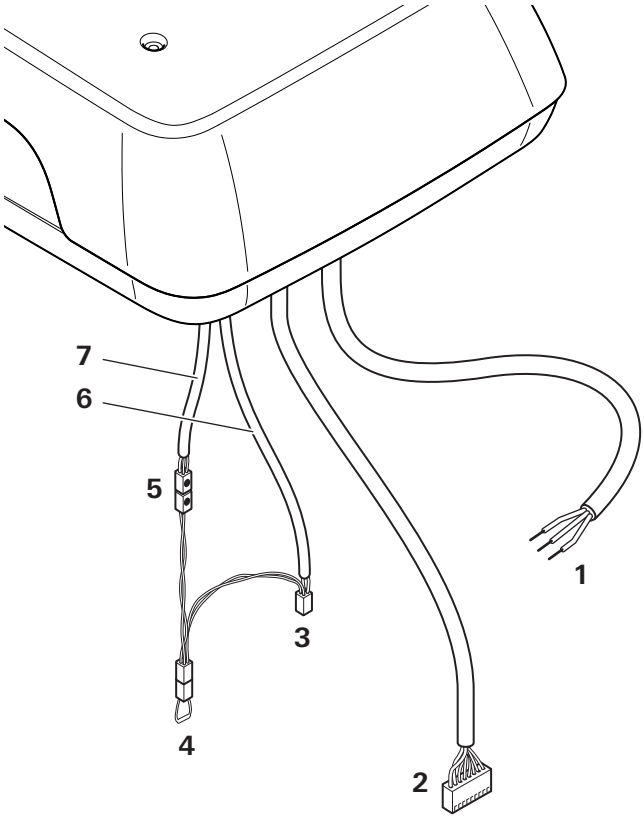

Fig. 21

	Function	Colour
L	Line conductor / phase	brown
N	Neutral conductor	blue
PE	Protective earth conductor	green / yellow

► Restore electrical safety in the vehicle (close distribution boxes / cable ducts, replace covers).

Initial start-up must be carried out by a qualified electrician.

- ► Connect the vehicle to the 230 V AC mains.
- ► Carry out electrical tests of the installation (protective earth conductor PE, insulation, automatic fuse, residual current circuit-breaker, etc.).
- ► Start the air conditioning system.

6.11 Cable routing and strain relief

NOTICE
Malfunction during operation due to incorrectly positioned connector cables

- ► The connector cable must not protrude into the fan opening or intake air duct.
- ► Lay the mains cable separately from the other cables.
- ► Secure the connector cable to the mounting frame with cable ties.
- ► Excess cable can be tucked into the roof cut-out behind the rib on the mounting frame.

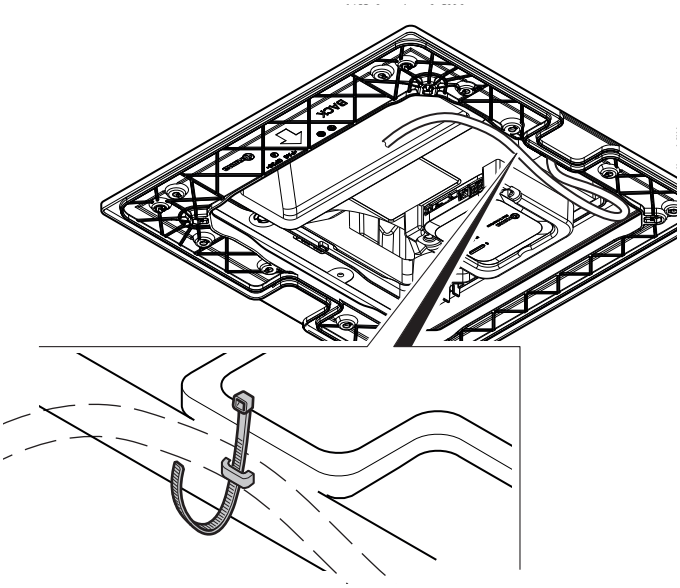

Fig. 22

6.12 Installing the air distributor

Inserting the roof thickness adapter

The 20 mm roof thickness adapter forms an air duct between the external unit and the air distributor.
Use only for roof thicknesses over 50 mm.

- ► Attach the 20 mm roof thickness adapter (Fig. 23-2) to the air duct of the air distributor (Fig. 23-3) and push it on as far as it will go. Note the direction: Lugs (Fig. 23-4) point forwards.

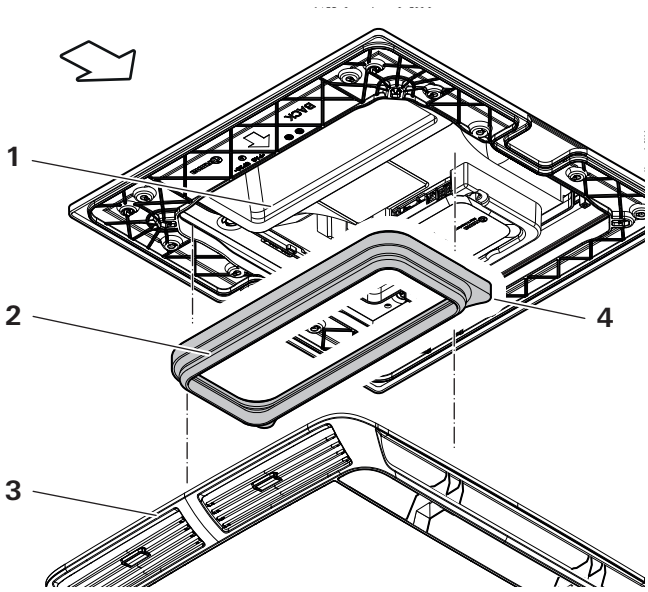

Fig. 23

- ► If required, fit several 20 mm roof thickness adapters on top of each other, see table below:

Roof thickness (mm)	Number of roof thickness adapters
25 - 50	0
50 - 60	1
60 - 80	2
80 - 100	3
100 - 110	4

- ► Only then fit the air distributor as described below.

Screwing on the air distributor

WARNING
Personal injury due to falling components
Air distributors can fall down when subjected to vibration due to inadequate fastening.

- ► Ensure correct tightening with the specified torque.
- ► Follow the installation instructions.

- ► Turn the air distributor so that the operating buttons point in the direction of travel (Fig. 24-1).

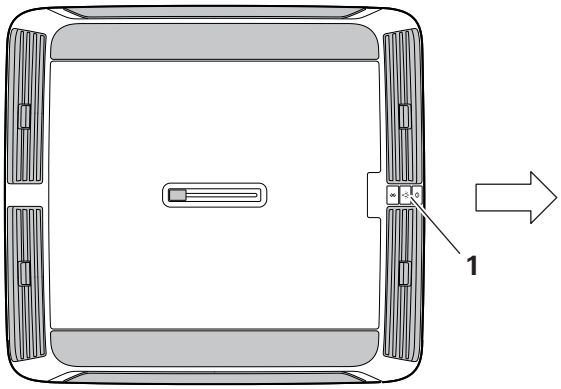

Fig. 24

► Connect the connector cable of the air distributor (Fig. 25-2).

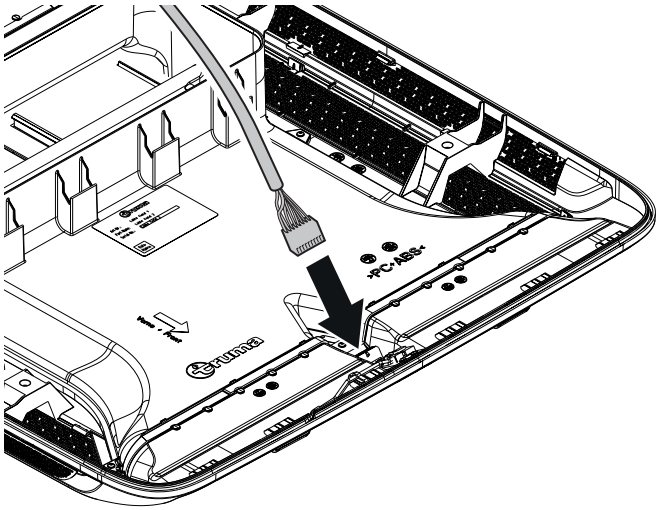

Fig. 25

► Attach the air distributor to the air duct of the external unit (Fig. 26-1) and push it up vertically towards the ceiling.

► Screw the air distributor to the mounting frame, using 4 screws (Fig. 26-3) (supplied) (Fig. 26). Tighten the screws with a torque of 2 Nm.

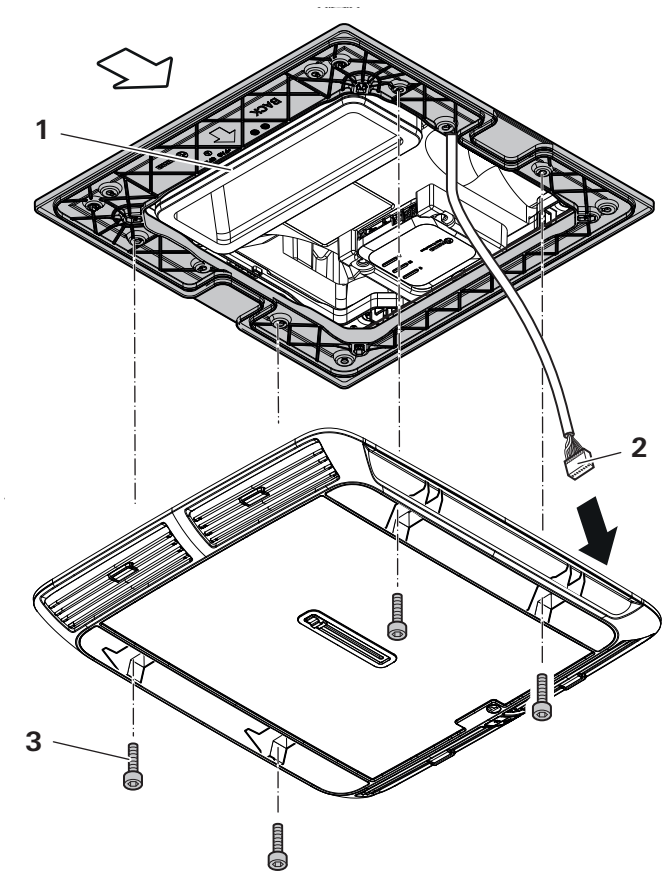

Fig. 26

ⓘ Screwlock has been applied to the screws. If the screws are reused (e.g. after dismantling), use low-strength screwlock, such as Loctite, or the screws that are obtainable as spare parts.

► Attach both panels to the bottom of the air distributor (Fig. 27).

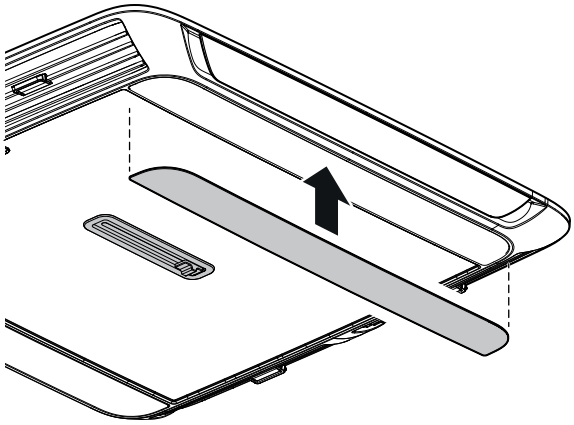

Fig. 27

To do this, first insert the panels on the inside of the air distributor (Fig. 28-1), then press them in on the outside and snap them into place (Fig. 28-1).

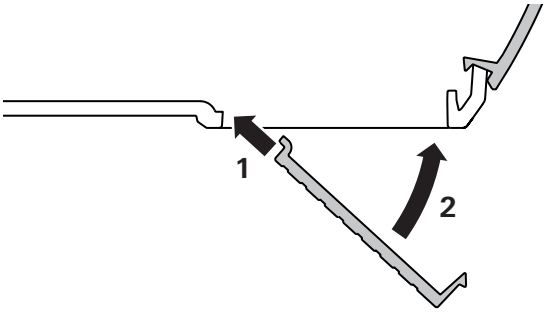

Fig. 28

6.13 Condensation trap

During operation, condensate forms on the heat exchangers in the air conditioning system. This water must be drained to the outside.
The condensate flows through two drainage openings in the bottom of the air conditioning system (Fig. 29) onto the vehicle roof (Fig. 30) and from there to the ground.

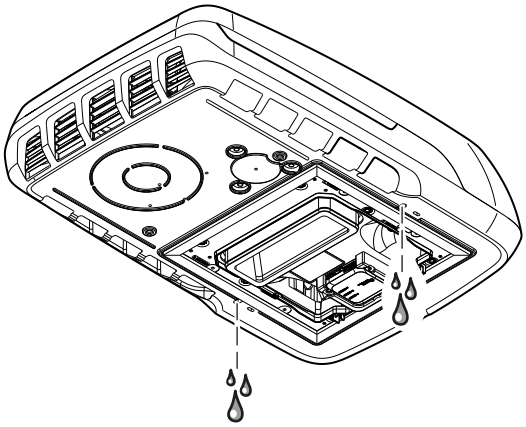

Fig. 29

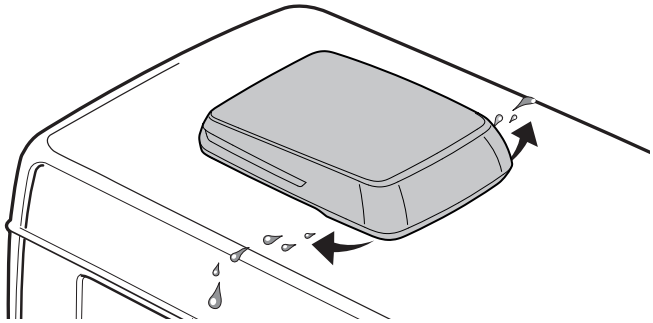

Fig. 30

Instructions for installation

- The surface of the vehicle roof must be designed at the drainage points so that the condensation from the air conditioning system can drain freely.
- The drain openings must be free of dirt or other blockages.
- The surrounding foam rubber seal must not be damaged and the vehicle roof must be level over the entire contact surface of the seal. Otherwise condensation, dew or rainwater could penetrate the vehicle interior and cause damage to the vehicle.

7 Initial start-up

Initial start-up must be carried out by an expert.

NOTICE

► If the air conditioning system has been turned over or is not horizontal, you must wait for 2 hours before switching it on.

► Start the air conditioning system.

► Check the functions of the air conditioning system according to the operating instructions.

7.1 Finishing work

7.1.1 Mounting for the Aventa 2.G remote control

There is a mounting for the Aventa 2.G remote control that can be mounted on a wall in the vehicle, for example (Fig. 31).

► Attach the mounting for the Aventa 2.G remote control at the desired location.

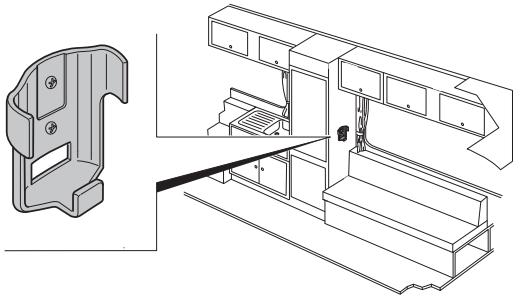

Fig. 31

► Pair the Aventa 2.G remote control with the air conditioning system.

See: Operating instructions “Pairing the Aventa 2.G remote control with the air conditioning system”

7.1.2 Checking condensation traps

► After installing the air conditioning system, ensure that the condensation traps on the vehicle roof are not blocked.

7.1.3 Documents

► Attach the application tracking label in a clearly visible place in the vehicle.

► Hand the operating instructions over to the user or owner of the vehicle.