WINEGARD© Air 360

Amplified Local HD and Digital Broadcast TV/AM/FM Antenna for VHF & UHF Digital and HD TV Channels

INSTALLATION AND OPERATION MANUAL

Model CCA360B



CTC RV COAST TO COAST
Unit 1A, 246 Miller Road
Villawood NSW 2163

Postal Address: PO Box 6287
Silverwater NSW 1811

Phone: 02 9645 7600 Fax: 02 9645 7688

Email Technical: technical@coastrv.com.au
Email Warranty: warranty@coastrv.com.au

2452541 Rev1 8-24

Specs / Features

- Designed for RV use
- Durable UV and weather resistant
- 360° Signal Reception
- High Definition VHF/UHF Digital Signals
- Amplified
- State of the art pHEMT technology with 4G LTE Filter
- Range – Up to 90 km*
- AM/FM
- Height – 17.53 cm
- Diameter of dome – 43.82 cm
- Frequency Range:
  - VHF 54 to 230 MHz
  - UHF 470 to 700 MHz
  - AM 520-1710KHz
  - FM 87.5-108 MHz
- Gain – 18 dB
- Noise – 1 dB
- Impedance – 75 ohms
- Power Supply – DC 12V



*Antenna reception may vary based on transmitting antenna tower height, lobe pattern of the transmitter, height of the receiving antenna, weather conditions, and terrain on receiving path, including trees, buildings and hills.

Safety Recommendations

– Do not attempt to install this system in the rain or under any wet conditions.
– Do not paint this antenna. Painting the antenna will void the warranty.

Parts



Antenna with AM/FM antenna



7.62 m Coax Cable - 2



Coax to Audio Cable



Power Supply/Wall Plate w/Hardware

Mounting Screw (10)

Choosing a Location for the Antenna & Power Supply

Before mounting the antenna, determine a location for the wall plate/ power supply. Keep in mind the following:

- A coaxial cable will have to run from the power supply to the antenna and from the power supply to each television.
- An additional coax cable will have to run from the AM/FM antenna to the radio.
- The provided coax cables will have to be routed through the roof directly into the perimeter of the antenna. It will not seal correctly for the cables to exit under the flange. Failure to install correctly could cause damage to the antenna and possibly the RV.
- A 12 V connection must be made to the back of the power supply.

Then, choose a location for the antenna that meets the following requirements:

- Offers enough support for a secure installation
- Distance of 46cm to nearest obstruction (recommended for best performance)

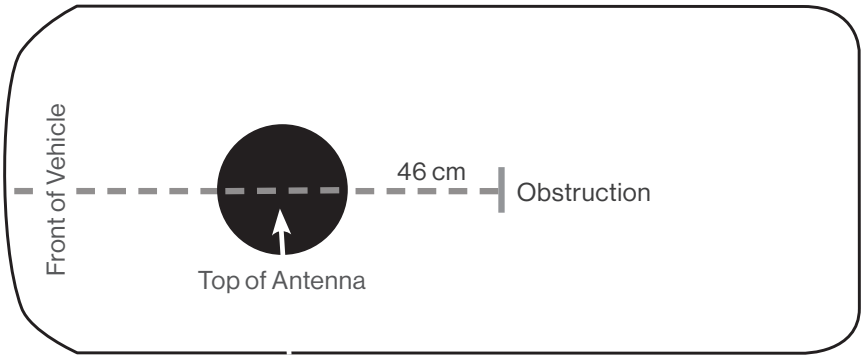

Winegard offers the following installation steps for the Winegard Air 360:

Failure to follow these instructions could cause damage to the unit making it inoperable, as well as possible damage to the vehicle on which it is installed.

Step 1 – After selecting a spot on the vehicle for the antenna, drill at minimum a 2.54 cm hole for two coax cables *(provided)* to run from the antenna to the Winegard power supply and from the AM/FM antenna to the AM/FM receiver *(not provided)*. **Do not seal this hole**.

Step 2 – Next, connect the coax cable to the Over-The-Air (OTA) antenna F-Jack located centrally under the dome. If AM/FM is desired, connect a coax cable to the F-Jack on the AM/FM antenna located on the base of the AM/FM antenna. Route both coax cables through the 2.54 cm hole created in step 1.

NOTE: To ensure a reliable signal, it is recommended to use the supplied RG-6 coax directly from the roof antenna to the Winegard power supply.

Be sure to tighten the coax cables to the F-Jacks (finger tight plus 1/8 turn).
Failure to do so may cause the signal to become intermittent or unusable.

Step 3 – On the edge of the flange you will notice 2 **FRONT** ⇕ **REAR** labels. These labels should be facing the front of the RV on one side and the rear of the RV on the other.

Step 4 – It is recommended to use Butyl tape for extra protection under the flange before screwing to the roof.

NOTE: Before using the supplied mounting screws, check with your vehicle manufacturer for any special screw requirements.

Screw in 6 approved mounting screws into the 6 mounting holes around the flange and into the roof.

CAUTION: Do not overtighten the mounting screws. This could cause the plastic flange to break.

Step 5 – Add approved sealant completely around the base and over each screw.

Step 6 – Connect the coax cable attached to the OTA antenna to the ANT IN F-Jack input of the Winegard power supply.

Step 7 – Connect the coax cable attached to the AM/FM Antenna to the Audio Extension Cable (CL-FM06). Next connect this Audio Extension Cable into the AM/FM receiver.

Step 8 – Next, to complete the installation refer to page 5 on installing the power supply.

Installation Diagram

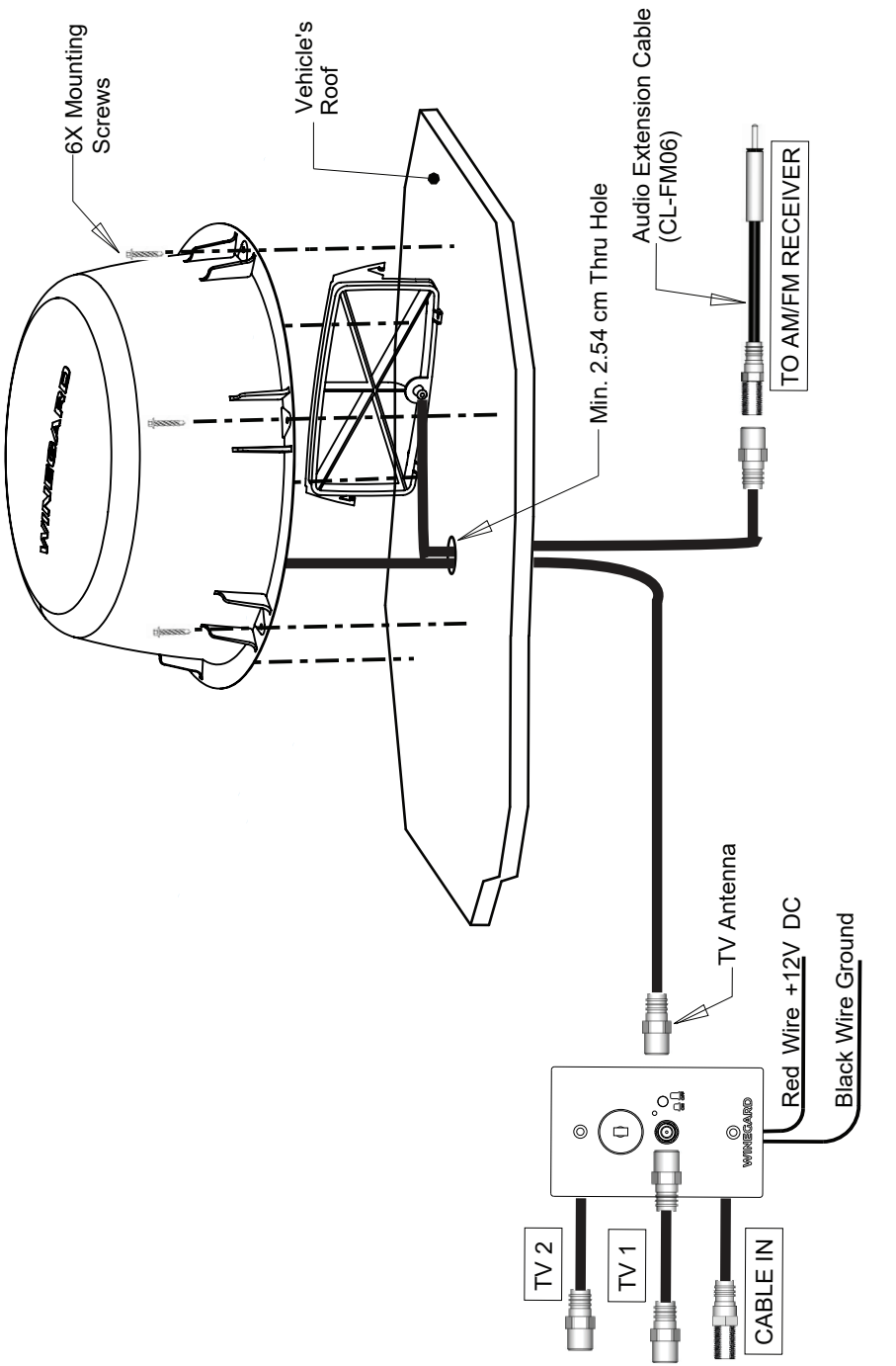

Installing the Power Supply

WARNING: The power supply should be turned off when connecting cables.

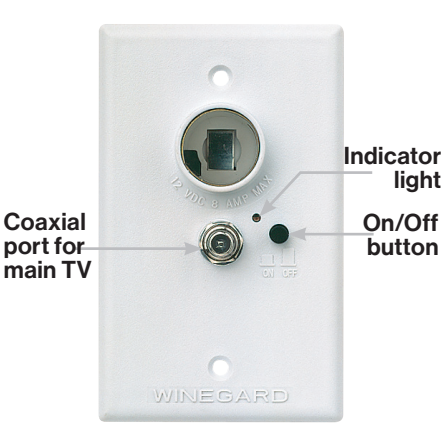

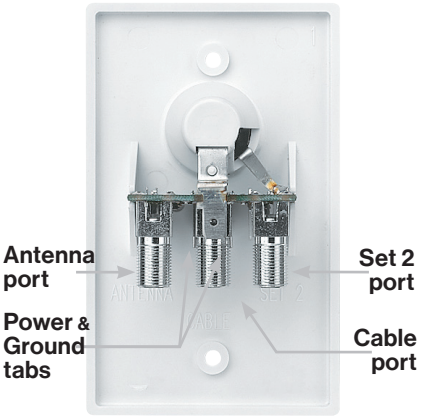

Step 1 – The power supply may be flush mounted in most standard electrical boxes. To flush mount, cut a hole in the wall to fit the box. Run two #12 wires between the wall plate and +12 VDC source, and route downlead cable to this location.

Step 2 – Make a 12 volt connection to the power supply. Install the supplied terminals on wires from +12 VDC source, and crimp the terminals with an appropriate crimping tool.

Step 3 – Push the wires onto tabs on the back of the power supply. ("PWR" and "GND" are also noted on the underside of the power supply electronics board.)

Step 4 – Connect the coax cable from the antenna to the "ANTENNA" port on the power supply, and tighten until fingertight. Then, tighten ¼ turn more.

Step 5 – If hooking up the antenna to two televisions, connect a coax cable from the "SET 2" port to the "Antenna In" port on the second television.

If hooking up a cable input, connect the cable input to the "CABLE" port on the power supply.

Step 6 – Mount the power supply in wall with the provided screws.

Step 7 – Connect a coax cable from the coax port on the front of the power supply to the "Antenna In" coax port on the main TV.

Step 8 – Press the "ON" switch on the front of the power supply, and check that the light is on.

This unit is equipped with a polyswitch, which will shut down +12 VDC if there is a direct short between the antenna and power supply. The indicator light will not light. Once the short is eliminated, the device will reset itself.

First time users

You must run a channel scan after installing the antenna to receive maximum programming.

Ensure the antenna power supply (wall plate) is in the “ON” position and the green indicator light is illuminated.

A new scan will find any new channels that have been added in your area as well as finding any channels that have changed or moved since the last scan.

While the steps to perform a channel scan may vary between televisions or compatible devices, below are some general guidelines to follow.

How to Run a Channel Scan

Using the television remote, select “Menu” and then “Settings.”

Select “Channel Setup.”

Select “Antenna” or “Air,” depending on your TV. Make sure you are not on “Cable.”

Select “Channel Search” or “Channel Scan.” Keep in mind that steps to perform a channel scan may vary. If the wording in your TV differs from the options shown, refer to your TV user manual for help.

Running a channel scan is NOT the same as pressing Channel UP/DOWN on your remote.

To receive maximum programming, you have to run a channel scan after setting up the antenna. To keep your channel line-up up-to-date, it is a good idea to run a channel scan monthly, anytime a channel is lost, and anytime you change locations.

Troubleshooting

Do not install couplers, splitters, etc. between the power supply and the antenna. Installation of any item on the downlead may cause a short in the system. The downlead supplies +12 VDC to the preamp in the antenna.

The power supply should be turned OFF when connecting/disconnecting cables to power supply and antenna but should be turned ON when testing for voltage.

Testing Power Supply

Make sure the TV set is working properly.

Remove the power supply from wall, and visually inspect for burned/broken parts. If there are ANY broken/burned parts, replace power supply.

Disconnect the cable from the antenna jack on the power supply. Check for +12 VDC. If +12 VDC is present, there is a cable problem connecting the power supply to the antenna. Repair/replace cable.

If +12 VDC is not present at the antenna jack, be sure the indicator light is ON. If not, check the polarity of the red/white wires and the +12 VDC source.

Coast RV Pty Ltd trading as
Coast to Coast RV Services
ABN 49 097 104 492 - ACN 101 461 330
PO Box 415, Regents Park NSW 2143
Ph (02) 9645 7600 - Fax (02) 9645 7699
Email: warranty@coastrv.com.au
Web: www.coastrv.com.au

Warranty Against Defects

1 WHAT THIS WARRANTY RELATES TO

1.1 This warranty covers goods supplied by Coast RV Pty Ltd T/A Coast to Coast RV Services ("Supplier") to the Client ("Goods") and relates to any defects in materials and workmanship under normal use and maintenance ("Defect").

2 WHAT THE SUPPLIER WILL DO TO HONOUR THE WARRANTY

2.1 The Supplier will:

(i) replace or repair the Goods or the defective part of the Goods free of charge;
(ii) arrange for the Goods or the defective part of the Goods to be repaired or replaced by a qualified repairer free of charge.

2.2 The Supplier reserves the right to replace defective parts of the Goods with parts and components of similar quality, grade or composition where an identical part or component is not available.

2.3 Goods presented for repair may be replaced by refurbished goods of the same type rather than being repaired. Refurbished parts may be used to repair the goods.

3 WHAT THE CLIENT MUST DO TO CLAIM THE WARRANTY

3.1 To claim the benefit of the warranty, the Client will need to (sequentially):

(i) first contact the Supplier; and
(ii) present the defective Goods to the Supplier for inspection, including inspection for defective workmanship, or otherwise provide evidence of the claimed Defect, accompanied by evidence of proof of purchase and date of delivery, and if applicable, evidence of maintenance performed in accordance with the relevant maintenance schedules.

3.2 The claim listed in clause 3.1 may be made in person, or the claim may be sent to the address listed on this form, including the particulars required under clauses 3.1(i) and 3.1(ii).

3.3 The appropriate form for making a claim for warranty is as attached.

4 DURATION OF WARRANTY

4.1 This warranty will cease:

(i) where the Goods are purchased already fitted in or as a component of a vehicle or RV: from the date that is twelve (12) months after the Client takes delivery of the vehicle or RV; and
(ii) where the Goods are purchased separately or as an after-market item: from the date that is twelve
(12) months from the date of purchase.

4.2 If a Defect does not materialise in the Goods prior to the date provided in clause 4.1, the Supplier will have no liability to the Client under this warranty.

5 RESPONSIBILITY FOR COSTS OF CLAIM UNDER THIS WARRANTY

5.1 The Supplier is responsible for the costs directly associated with repairing or replacing the Goods in accordance with clause 2.1 only.

5.2 Any works required to be completed in addition to fixing the Defect are the responsibility of the Client. Additional works includes any costs associated with any testing or repair of the Goods or any goods to which they are fitted, undertaken by a third party in relation to any defect without prior authorisation from the Supplier.

5.3 Where it is determined that the Goods do not have a Defect, the Client will be charged a GST exclusive inspection fee of forty-five dollars ($45.00) plus freight costs for the return of the Goods, this is subject to change without notice.

5.4 The cost of delivery and insurance of the Goods to and from the Supplier, travel costs to and from the Supplier, and the cost of inspecting and testing the Goods are the sole responsibility of the Client.

Coast RV Pty Ltd trading as
Coast to Coast RV Services ABN 49 097 104
492 - ACN 101 461 330
PO Box 415, Regents Park NSW 2143
Ph (02) 9645 7600 - Fax (02) 9645 7699
Email: warranty@coastrv.com.au
Web: www.coastrv.com.au

Warranty Against Defects(cont)

6 **WARRANTY LIMITATIONS**

6.1 The Supplier makes no warranties or representations other than those set out in this warranty document except as is required by law.

6.2 The Supplier will not be liable under this warranty:-

(i) to the Client or any other person for any consequential, direct or indirect loss, damage or costs incurred or suffered by the Client or any other person, including but not limited to damage to persons, other property, loss of turnover, loss of profits, loss of business or goodwill;
(ii) to the Client for transportation or travel costs which are the Client's responsibility;
(iii) for damage or defects in any Goods caused by improper transportation, storage or any other misuse, neglect or accident.
(iv) for the installation of the Goods. Any fault or defect due to installation should be referred to the installer. The Goods must be installed in accordance with the Manufacturer's instructions and any relevant legislation or code.

6.3 This warranty covers the Client only and it is not transferrable if the Goods are sold by the Client during the warranty period.

7 **WARRANTY EXCLUSIONS**

7.1 This warranty will not apply where:

(i) the Goods have been improperly modified or repaired or the Good's defect has arisen due to the Client's failure to properly install, fit, maintain, service or use the Goods in accordance with the specifications and instructions provided by the Manufacturer, including a failure to comply with the relevant maintenance schedule (where applicable);
(ii) the Supplier cannot establish any Defect in the Goods after testing;
(iii) the Goods have been used other than for the purpose for which they were designed;
(iv) the Goods have been subject to abnormal conditions, including but not limited to temperature, pressure, stress, load or similar;
(v) the Client or installer have used or fitted non-genuine or non-approved parts and accessories to the Goods or have failed to use recommended parts and accessories;
(vi) the Good's defect has arisen due to abuse, misuse, neglect or accident;
(vii) the Goods have not been installed in accordance with the relevant instructions;
(viii) the Good's defect is caused by use or fair wear and tear of the Goods (or expendable parts).

8 **RIGHTS AT LAW**

8.1 The benefits given to the Client under this warranty are in addition to other rights and remedies of the Client at law in relation to the Goods.

8.2 Our Goods come with guarantees that cannot be excluded under the Australian Consumer Law. You are entitled to a replacement or refund for a major failure and for compensation for any other reasonably foreseeable loss or damage. You are also entitled to have the Goods repaired or replaced if the Goods fail to be of acceptable quality and the failure does not amount to a major failure.


WINEGARD®
™

WARRANTY CLAIM FORM

Warranty Providers Name:	Coast RV Pty Ltd trading as Coast to Coast RV Services ABN 49 097 104 492 - ACN 101 461 330
Warranty Providers Address:	PO Box 415 Regents Park NSW 2143
Client:	
Contact No.	
Description of Goods provided:	
Receipt enclosed: (tick box)	❒ Yes ❒ No
Receipt No:	
Description of defects (Give as much detail as possible. Use a separate page if required):	
Date of purchase/services provided:	

I hereby declare that the information provided above is true and correct and to the best of my knowledge and belief and I have complied with all the conditions of the warranty.

Signed:.....

Name (please print): .....

Dated: .....

[Please note, the issue or completion of this form by the Client does not constitute an admission of liability by the Supplier]


WINEGARD®
™